BOSERL

专注减速机电机 研发 制造

您设备的速度，BOSERL可以满足

K

KA

KAF

KF

2021

广东伯仕传动科技有限公司

Guangdong Boserl Transmission Technology Co.,Ltd

德国BOSERL减速机成立于2010年，专注于减速机电机设备研发、制造，目前已经和多个国内外大型企业建立技术合作共享关系。

通过建立以品质为核心的技术链生态，以市场需求和企业自身转型升级为动力，BOSERL已迅速成长为国内外减速机电机设备行业的领头羊，成为减速机电机设备行业的深耕版"新SEW"

我公司的主要产品有：R/F/K/S四大系列齿轮减速机、蜗轮蜗杆减速机、标准工业齿轮箱、小型减速电机，功率覆盖5W-9550KW的标准系列。

以全新的“模块组合”概念，为机电电子一体化的发展提供了更加广阔的空间，应用于各种机械设备中，包括钢铁、冶金、水泥、矿山、基建、建材、环保、造纸、港口、机场、高铁、地铁、石化、轻工、电镀、变位机、卷扬机、舞台机械、食品饮料及仓储物流等等。在国家重点工程项目中减速机的产品有着广泛的应用，如国内各主要港口、 首都机场及国内各大机场、首都剧场、北京人民大会堂大、小礼堂改造工程、 天津夏利、长春一汽、上海通用、大众、上海磁悬浮列车工程, 各大污水处理项目以及著名的中华世纪坛、三峡水利工程等等。

多年来，公司不断引进德国新设备如：Niles成形磨齿机、新工艺，采用CAD / CAM / CAI技术，逐步健全了生产、安装、售后服务，质量保证模式，严格按照ISO - 9001 - 2000质量体系要素运做，，确保生产高品质、高规格的产品。

公司团队均已在机电行业从业达到10年以上专业人才组成，团队专注为客户解决传动上所有难题，以多样式方案为客户提供技术支持，提高客户生产效率，降低企业成本，减少客户不必要的浪费及损失，BOSERL已为十几万家企业提供产品解决方案，做到全心全意为客户着想，用价廉物美的产品提供最优质的服务。

实现价值最大化是每个企业的最核心需求。我们发现这个需求并未很好地得到满足，创立BOSERL就是为了实现这个朴素的愿望，帮助更多企业以更便捷、更高效地完成价值最大化，在行业的竞争中处于更加有利的位置,让世界因我们的付出而更加精彩，实现企业价值最大化。

这就是BOSEL！您设备的速度，BOSERL可以满足！

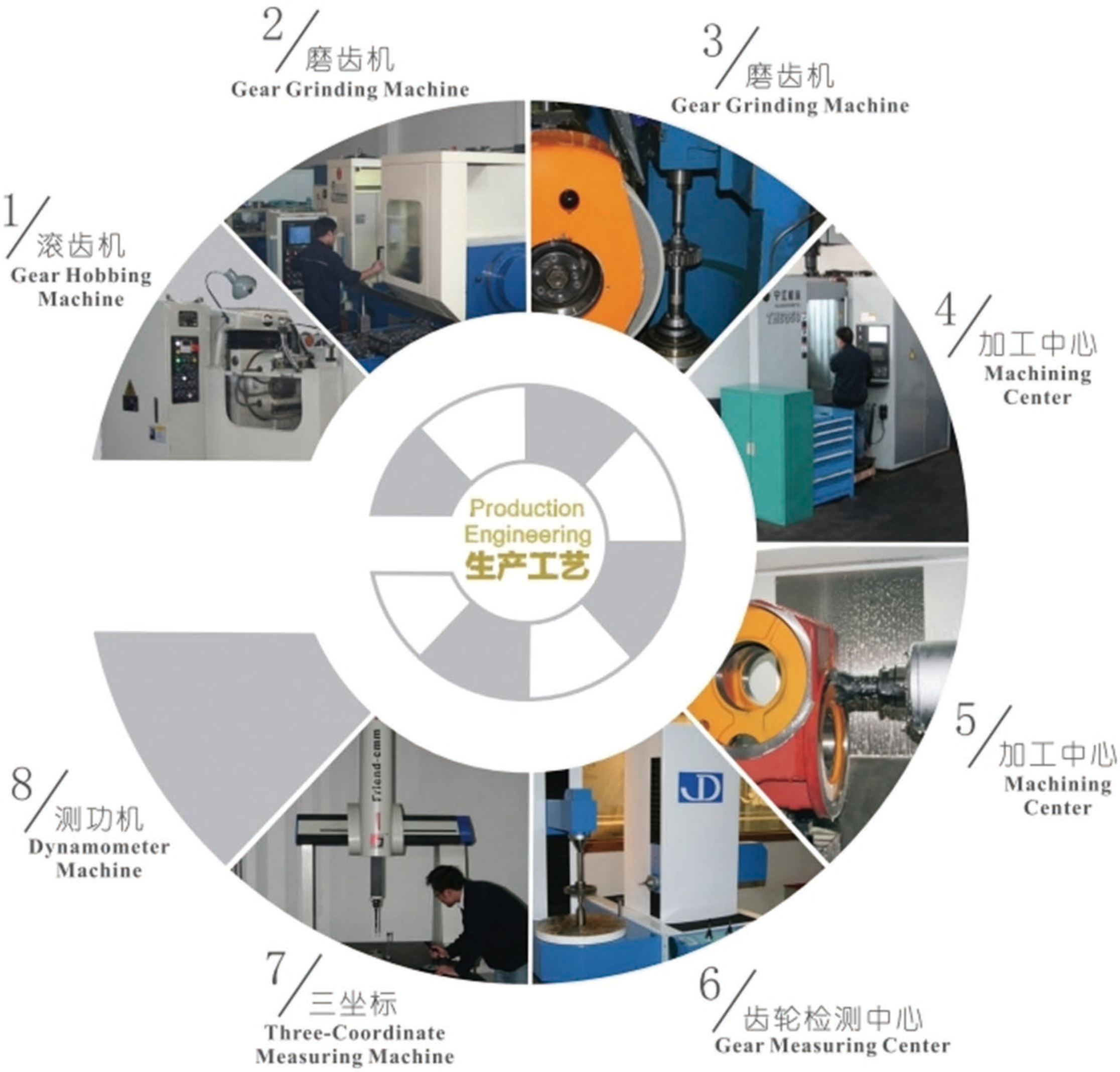
2/磨齿机
Gear Grinding Machine
3/磨齿机
Gear Grinding Machine
1/滚齿机
Gear Hobbing Machine
4/加工中心
Machining Center
Production Engineering
生产工艺
5/加工中心
Machining Center
8/测功机
Dynamometer Machine
7/三坐标
Three-Coordinate Measuring Machine
6/齿轮检测中心
Gear Measuring Center

1.5 选型表注释 / Selection Table Explanation

性能参数表结构说明 /Performance Parameter Table Structure

P_1 [kW]	n_2 [1/min]	M_2 [Nm]	i	Fr [N]	K	Frame size	Input Configuration

- P_1 [kW] → 电机功率 Power of motor
- n_2 [1/min] → 输出转速 Output speed
- M_2 [Nm] → 输出扭矩 Output torque
- i → 减速比 Ratio
- Fr [N] → 径向载荷 Permitted Overhung load Output side
- K → 服务系数 Service factor
- Frame size → 机座规格 Frame size
- Input Configuration → 输入配置 Input Configuration

性能参数表结构说明 / Performance Parameter Table Structure

M_{2max} [Nm]	n_2 [1/min]	i	Fr [N]	Frame size	Motor

- M_{2max} [Nm] → 极限输出扭矩 Max. Permitted Output torque
- n_2 [1/min] → 输出转速 Output speed
- i → 减速比 Ratio
- Fr [N] → 径向载荷 Permitted Overhung load Output side
- Frame size → 机座规格 Frame size
- Motor → 电机型号 Motor type

功率配置表结构说明 /Power Combination

n_2 [1/min]	M_{2max} [Nm]	Fr [N]	i	功率 Power	功率 Power	功率 Power	功率 Power	功率 Power	功率 Power

- n_2 [1/min] → 输出转速 Output speed
- M_{2max} [Nm] → 极限输出扭矩 Max. Permitted Output torque
- Fr [N] → 径向载荷 Permitted Overhung load Output side
- i → 减速比 Ratio

1.6. 润滑油 / Lubrication

1.6.1 润滑油类型 / Types of Lubrication

	环境温度(℃) Ambient Temperature(℃)	ISO粘度 ISO Viscosity Class	SHELL	Mobil MOBIL	bp BP	润滑油类型 Lubrication Type
GR GF GK GS	-40 ~ +10	VG 220	Shell Omala 200	Mobilgear 630	BP Energol GR-XP 220	矿物油 Mineral Oil
	-20 ~ +25	VG 150 VG 100	Shell Omala 100	Mobilgear 627	BP Energol GR-XP 100	
	-30 ~ +10	VG68-46 VG 32	Shell Tellus 32	Mobil D.T.E 13M		
	-40 ~ -20	VG 22 VG 15	Shell Tellus 32	Mobil D.T.E 11M	BP Energol HLP-HM 15	
	-40 ~ +80	VG 220	Shell Tellus 32	Mobil SHC 630		合成油 Synthetic Oil
	-40 ~ +10	VG 32		Mobil SHC 624		

1.6.2 润滑油量表

规定的加注量为参考值。精确值的变化与级数和传动比有关。请您在加注润滑油时一定要注意油位螺栓所指示的精确油量。后期调整安装方式时，您必须根据改变后的安装方式相应调整加注润滑剂。下表中列出了安装方式M1-M6的减速器相应的标准参考润滑油注入量值。

1.6.2 Lubricant Fill Quantity

The specified fill quantities are recommended values. The precise value varies depending on the number of stages and gear ratio. When filling, it is essential to check the oil level plug since it indicates the precise oil capacity. The following tables show guide values For lubricant fill quantities in relation to the mounting position M1 -M6.

GK..,GKA..B,GKH..B,GKV..B

减速器型号 Gear units	加注量 Fill quantity in liters 单位:升(L) Unit: L					
	M1	M2	M3	M4	M5	M6
GK..37	0.50	1.00	1.00	1.25	0.95	0.95
GK..47	0.80	1.30	1.50	2.00	1.60	1.60
GK..57	1.10	2.20	2.20	2.80	2.30	2.10
GK..67	1.10	2.40	2.60	3.45	2.60	2.60
GK..77	2.20	4.10	4.40	5.80	4.20	4.40
GK..87	3.70	8.00	8.70	10.9	8.00	8.00
GK..97	7.00	14.0	15.7	20.0	15.7	15.5
GK..107	10.0	21.0	25.5	33.5	24.0	24.0
GK..127	21.0	41.5	44.0	54.0	40.0	41.0
GK..157	31.0	62.0	65.0	90.0	58.0	62.0
GK..167	33.0	95.0	105.0	123.0	85.0	84.0
GK..187	53.0	152.0	167.0	200.0	143.0	143.0

GKF..

减速器型号 Gear units	加注量 Fill quantity in liters 单位:升(L) Unit: L					
	M1	M2	M3	M4	M5	M6
GKF37	0.50	1.10	1.10	1.50	1.00	1.00
GKF47	0.80	1.30	1.70	2.20	1.60	1.60
GKF57	1.20	2.20	2.40	3.15	2.50	2.30
GKF67	1.10	2.40	2.80	3.70	2.70	2.70
GKF77	2.10	4.10	4.40	5.90	4.50	4.50
GKF87	3.70	8.20	9.00	11.9	8.40	8.40
GKF97	7.00	14.7	17.3	21.5	15.7	16.5
GKF107	10.0	21.8	25.8	35.1	25.2	25.2
GKF127	21.0	41.5	46.0	55.0	41.0	41.0
GKF157	31.0	66.0	69.0	92.0	62.0	62.0

GKA..,GKH..,GKV..,GKAF..,GKHF..,GKVF..,GKAZ..,GKHZ..,GKVZ..

减速器型号 Gear units	加注量 Fill quantity in liters 单位:升(L) Unit: L					
	M1	M2	M3	M4	M5	M6
GK..37	0.50	1.00	1.00	1.40	1.00	1.00
GK..47	0.80	1.30	1.60	2.10	1.60	1.60
GK..57	1.30	2.30	2.70	3.20	2.90	2.70
GK..67	1.10	2.40	2.70	3.60	2.60	2.60
GK..77	2.10	4.10	4.60	6.00	4.40	4.40
GK..87	3.70	8.20	8.80	11.1	8.00	8.00
GK..97	7.00	14.7	15.7	20.0	15.7	15.7
GK..107	10.0	20.5	24.0	32.0	24.0	24.0
GK..127	21.0	41.5	43.0	52.0	40.0	40.0
GK..157	31.0	66.0	67.0	87.0	62.0	62.0
GK..167	33.0	95.0	105.0	123.0	85.0	84.0
GK..187	53.0	152.0	167.0	200.0	143.0	143.0

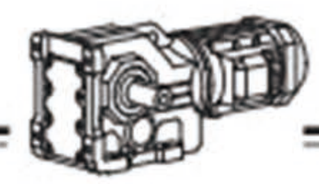

4.1 部件分解图 / Spare Parts List

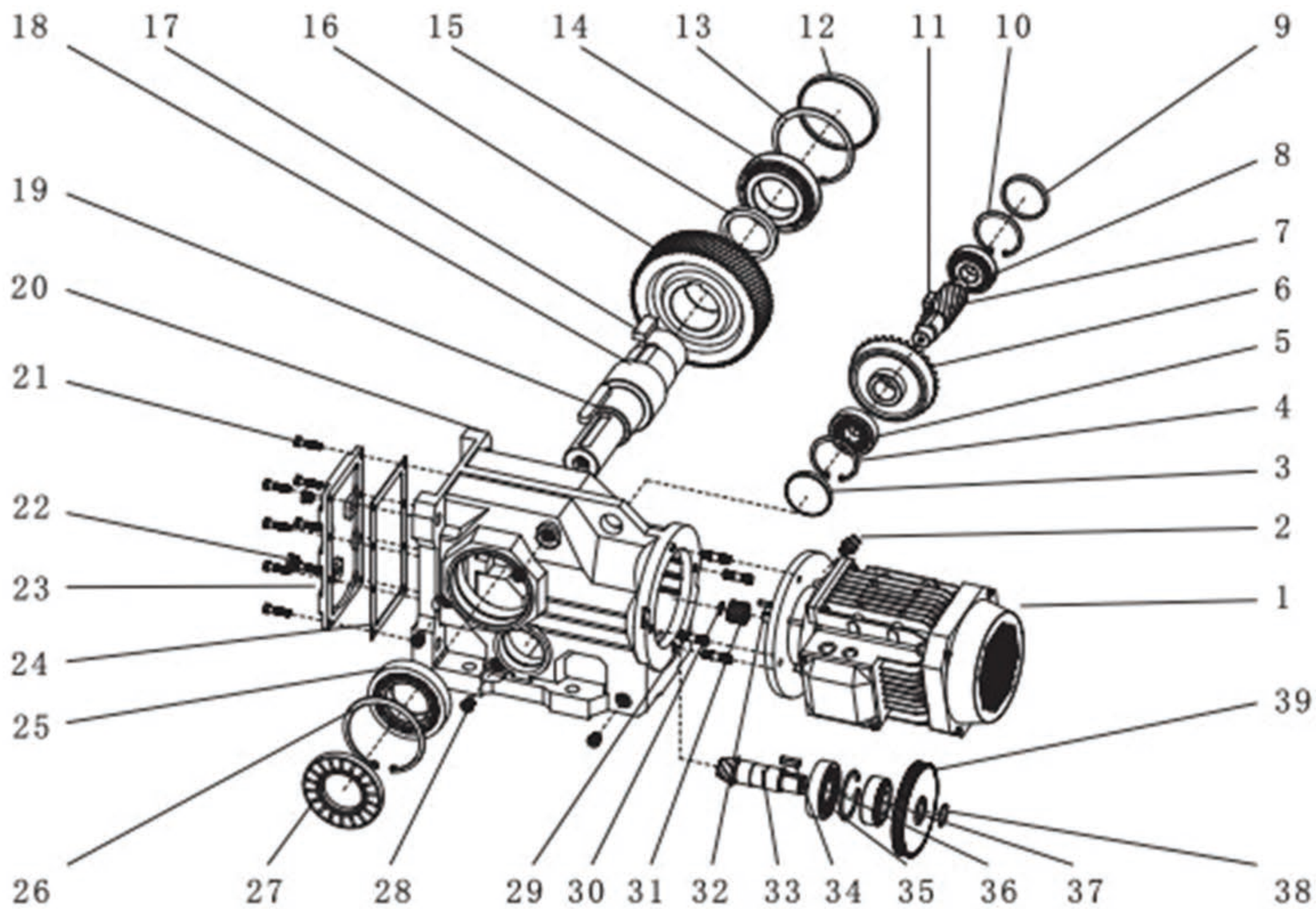

1 电机/motor
2 透气阀/breather valve
3 平面油封/plane seal
4 孔用挡圈/retaining rings for bores
5 轴承/bearing
6 伞齿轮/bevel gear
7 齿轮轴/gear shaft
8 轴承/bearing
9 平面油封/plane seal
10 孔用挡圈/retaining rings for bores
11 平键/flat key
12 平面油封/plane seal
13 孔用挡圈/retaining rings for bores
14 轴承/bearing
15 垫片/spacer tube
16 齿轮/gear
17 平键/flat key
18 输出轴/output shaft
19 平键/flat key
20 箱体/housing
21 外六角螺钉/hex head screw
22 油塞/oil level plug
23 盖板/cover plate
24 纸垫/gasket
25 轴承/bearing
26 孔用挡圈/retaining rings for bores
27 骨架油封/skeleton oil seal
28 油塞/oil level plug
29 双头螺栓/stud
30 轴用挡圈/retaining rings for shafts
31 齿轮/gear
32 平键/flat key
33 伞齿轮/bevel gear shaft
34 平键/flat key
35 轴承/bearing
36 孔用挡圈/retaining rings for bores
37 轴承/bearing
38 轴用挡圈/retaining rings for shafts
39 齿轮/gear

4.2 机型版本 /Versions

4.2.1 基本型式 /Basic Versions

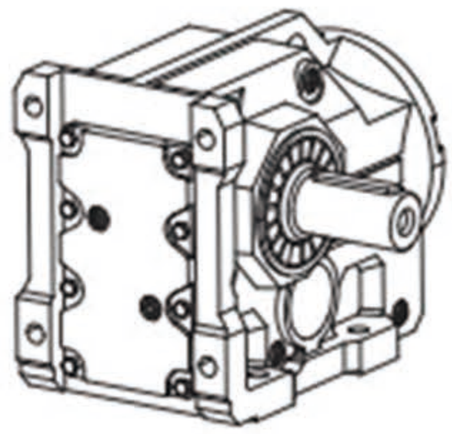	**GK..** 底脚安装斜齿-伞齿减速机 Foot-mounted helical-bevel gear unit.
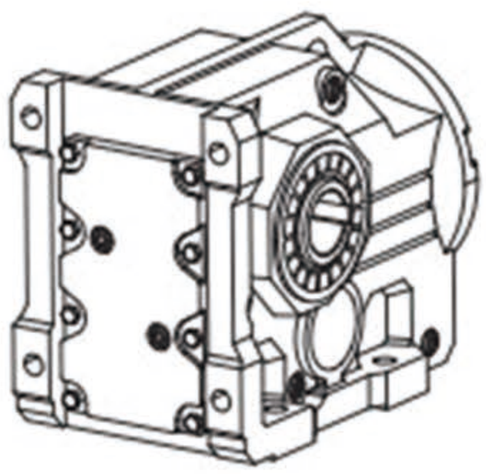	**GKA..B** 底脚空心轴安装斜齿-伞齿减速机 Foot-mounted helical-bevel gear unit with hollow shaft. **GKV..B** 底脚花键空心轴（DIN 5480）安装斜齿-伞齿减速机 Foot-mounted helical-bevel gear unit with hollow shaft and splined hollow shaft to DIN 5480.
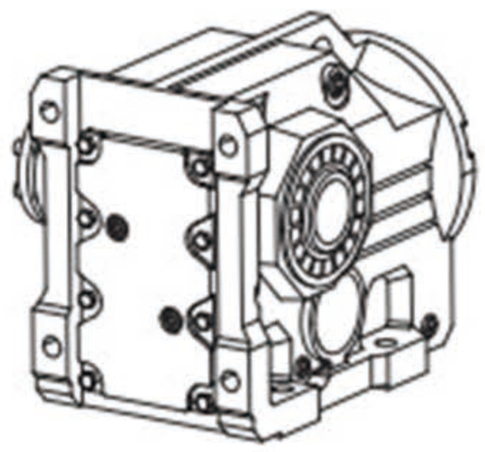	**GKH..B** 底脚空心轴锁紧盘安装斜齿-伞齿减速机 Foot-mounted helical-bevel gear unit with hollow shaft and shrink disc.
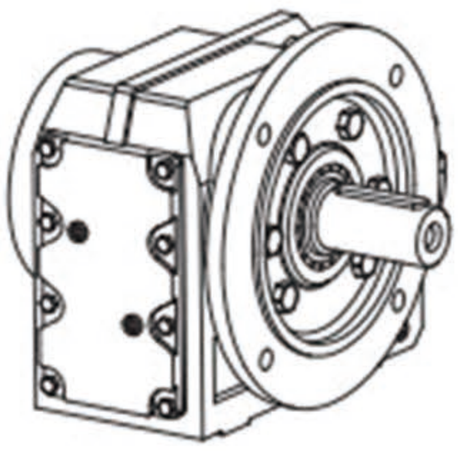	**GKF..** B5 法兰安装斜齿-伞齿减速机 Helical-bevel gear unit in B5 flange-mounted version.
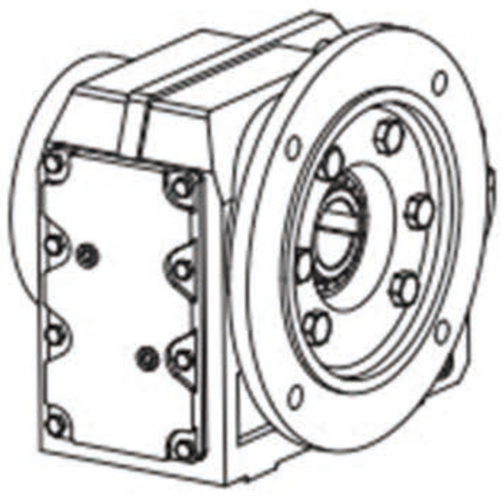	**GKAF..** B5 法兰空心轴安装斜齿-伞齿减速机 Helical-bevel gear unit in B5 flange-mounted version with hollow shaft. **GKVF..** B5 法兰花键空心轴（DIN 5480）安装斜齿-伞齿减速机 Helical-bevel gear unit in B5 flange-mounted version with hollow shaft and splined hollow shaft to DIN 5480.

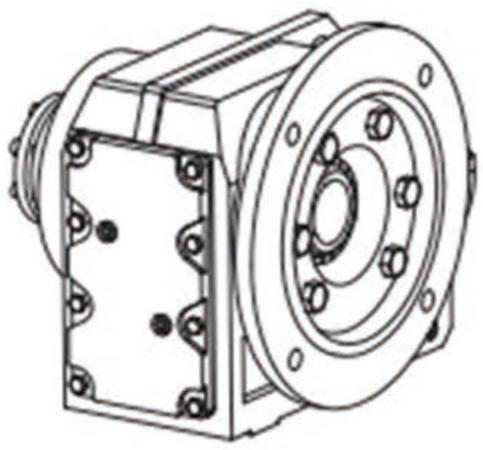	**GKHF..** B5 法兰空心轴锁紧盘安装斜齿-伞齿减速机 Helical-bevel gear unit in B5 flange-mounted version with hollow shaft and shrink disc.
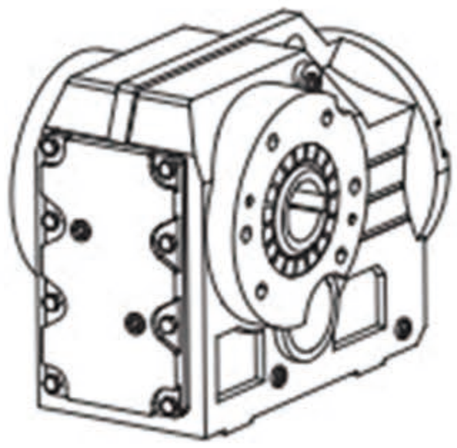	**GKA..** 空心轴安装斜齿-伞齿减速机 Helical-bevel gear unit with hollow shaft. **GKV..** 花键空心轴（DIN 5480）安装斜齿-伞齿减速机 Helical-bevel gear unit with hollow shaft and splined hollow shaft to DIN 5480.
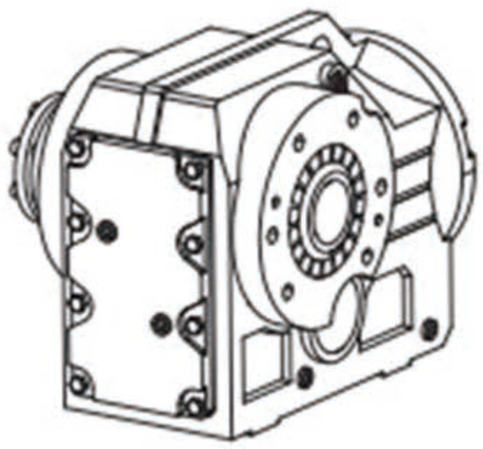	**GKH..** 空心轴锁紧盘安装斜齿-伞齿减速机 Helical-bevel gear unit with hollow shaft and shrink disc. **GKT..** 空心轴扭力臂安装斜齿-伞齿减速机 Helical-bevel gear unit with hollow shaft and torque arm.
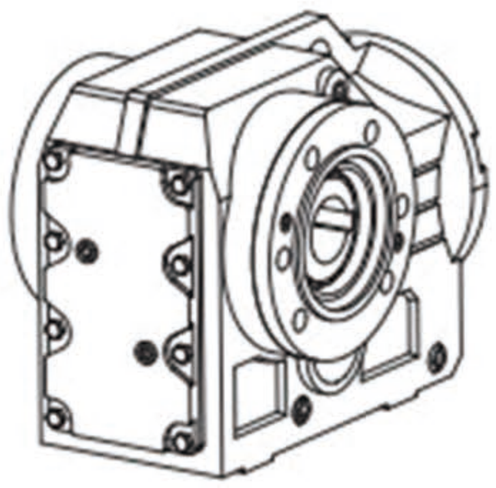	**GKAZ..** B14 法兰空心轴安装斜齿-伞齿减速机 Helical-bevel gear unit in B14 flange-mounted version with hollow shaft. **GKVZ..** B14 法兰花键空心轴(DIN 5480)安装斜齿-伞齿减速机 Helical-bevel gear unit in B14 flange-mounted version with hollow shaft and splined hollow shaft to DIN 5480.
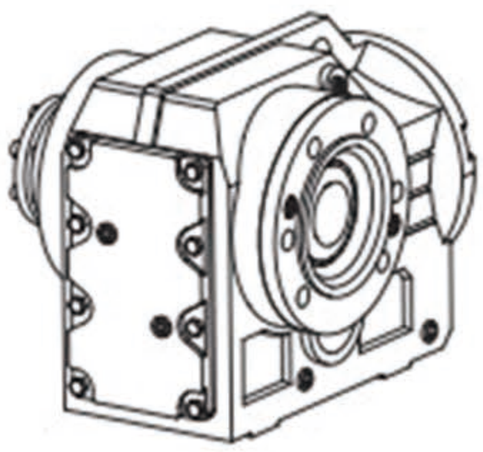	**GKHZ..** B14 法兰空心轴锁紧盘安装斜齿-伞齿减速机 Helical-bevel gear unit in B14 flange-mounted version with hollow shaft and shrink disc.

4.2.2 输入型式 / Input Versions

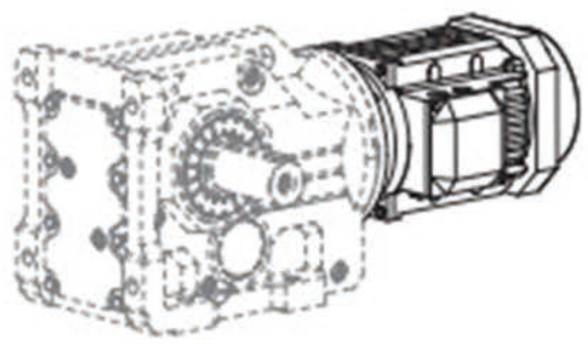	**GK.. Y..** 直联电机输入 Input with geared motors.
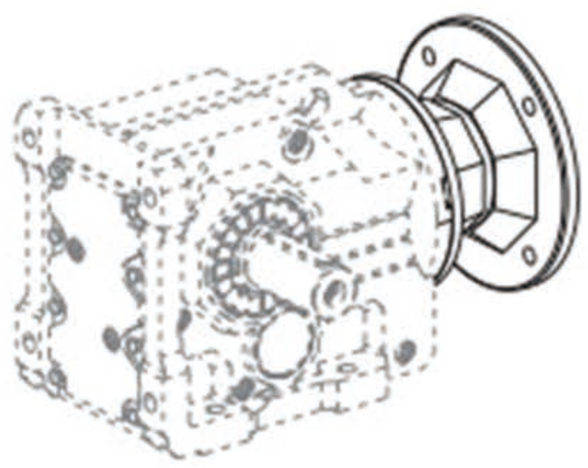	**GK.. AM..** AM（IEC）法兰输入 Input with AM adapters for mounting IEC motors.
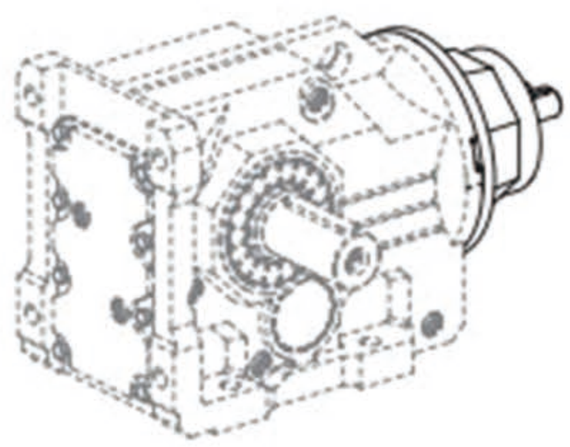	**GK.. AD..** AD 轴输入 Input with AD shaft assembly.

4.2.3 GK..与 GRF..组合 / GK.. and GRF.. Combination

当需要特别低速输出时，可选择 GRF 齿轮箱作为 GK 齿轮箱的输入。
If special low speed is needed, GRF.. gearbox can be the input of GK.. Gearbox.

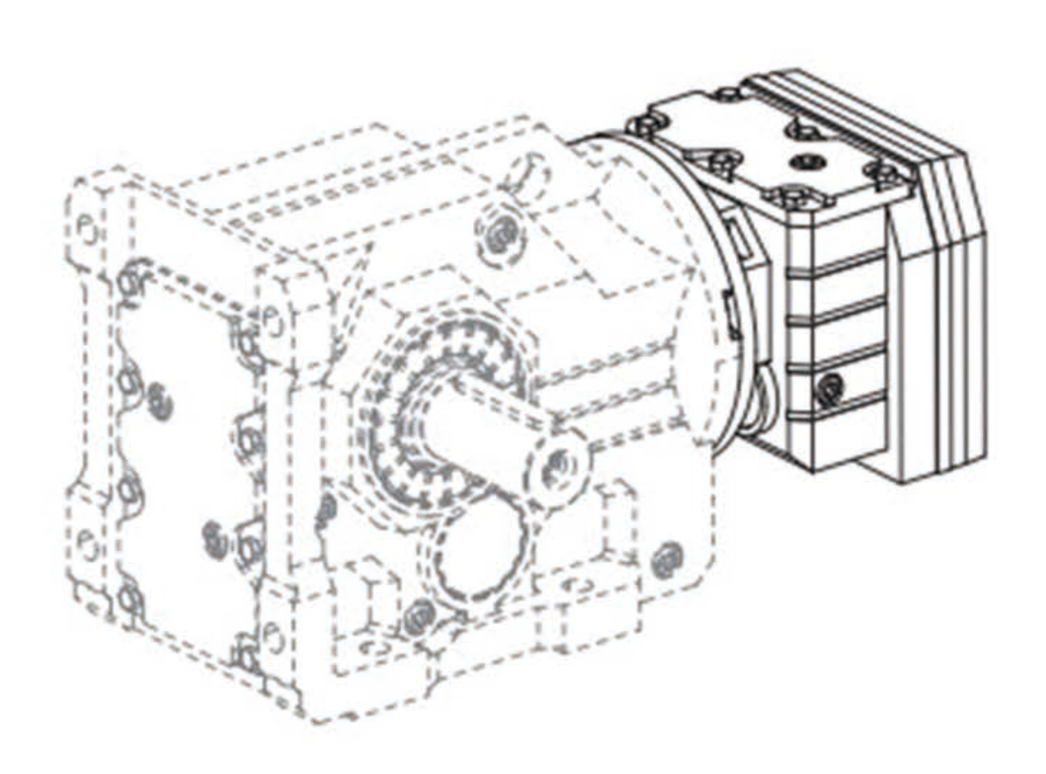

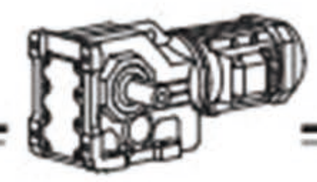

4.3 产品标注 / Product Code

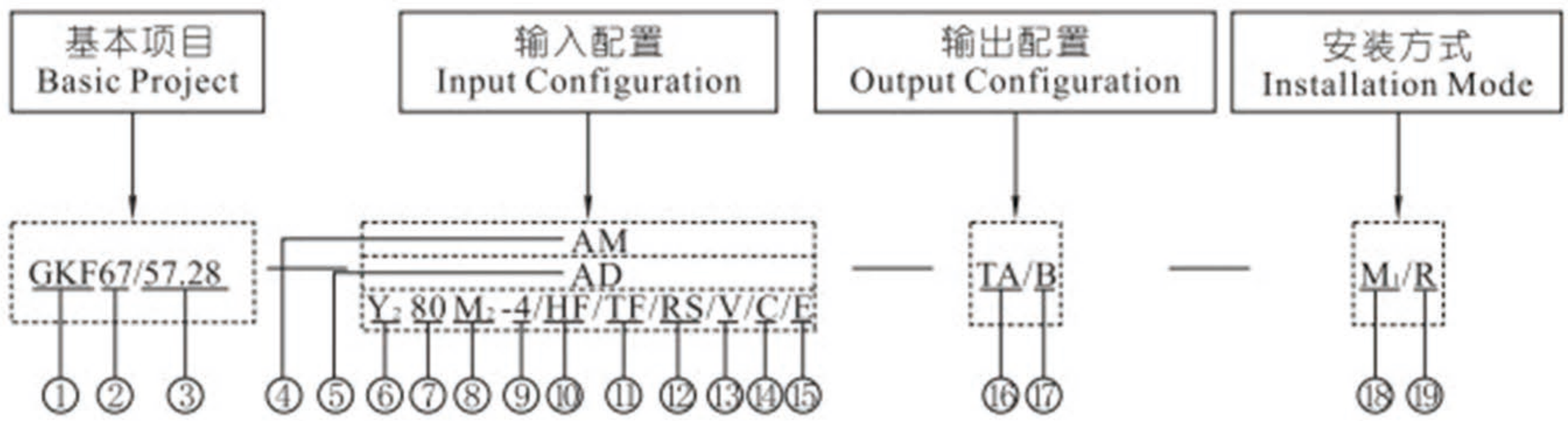

	标号 NO.	含义 Meaning	说明 Explanation
基本项目 Basic Project	①	系列代号 Series Code	GK、GKF、GKA...(详见4.2.1) GK,GKF,GKA...(see 4.2.1).
	②	机座号 Frame Size	机座号: 37、47、57... Frame Size: 37, 47, 57...
	③	传动比 Transmission Ratio	传动比 i Transmission Ratio I.
输入配置 Input Configuration	④	法兰输入代号 Flange Input Code	AM(IEC): 63、71、80...
	⑤	轴输入代号 Shaft Input Code	AD: 1、2、3...
	⑥	电机代号 Motor Code	Y_2: 三相异步电动机 Y_2: Three Phase Asynchronous Motor. YD: 变极多速三相异步电动机 YD: Variable-pole Multi-speed Three Phase Asynchronous Motor. YS: 小功率三相异步电动机 YS: Small Power Three Phase Asynchronous Motor. YVF_2: 变频调速三相异步电动机 YVF_2: Variable Frequency Speed Control Three Phase Asynchronous Motor. Y_2EJ: 电磁制动三相异步电动机 Y_2EJ: Electromagnetic Brake Three Phase Asynchronous Motor. YB2: 隔爆三相异步电动机 YB2: Flame Proof Three Phase Asynchronous Motor.
	⑦	电机机座号 Motor Frame Size.	63、71、80...
	⑧	电机定子铁芯长度代号 Length Code of Stator Core.	M、M_1、M_2、S、S_1、S_2、L、L_1、L_2
	⑨	电机极数 Pole Number of Motor.	2、4、6、8

	标号 NO.	含义 Meaning	说明 Explanation
输入配置 Input Configuration	⑩	手动释放装置 Manual Release Device	无 代 码: 无手动释放装置 No Code: No manual release device. H F: 手动释放装置带自锁功能 H F: Manual release device with self-locking Fun-Ction. H R: 手动释放装置不带自锁功能 H R: Manual release device without self-Locking function.
	⑪	电机热保护装置 Motor Heat-protection Device.	无 代 码: 无电机热保护装置 No Code: No motor heat-protection device. T F: 电机热保护装置 T F: Motor heat-protection device.
	⑫	逆止器 Backstop	无 代 码: 无逆止器 No Code: No backstop. R S: 逆止器 R S: Backstop.
	⑬	强制冷却风扇 Forced Cooling Fan	无 代 码: 无强制冷却风扇 No Code: no forced cooling fan. V: 强制冷却风扇 V: Forced cooling fan.
	⑭	防雨罩 Cover	无 代 码: 无风扇防护罩 No Code: No fan cover. C: 防雨罩 C: cover.
	⑮	编码器 Encoder	无 代 码: 无编码器 No Code: No encoder. E: 编码器 E: Encoder
输出配置 Output Configuration	⑯	扭力臂 Torque Arm	无 代 码: 无扭力臂 No Code: No torque arm. T A: 扭力臂指向 A T A: Torque arm pointing to A. T B: 扭力臂指向B T B: Torque arm pointing to B.
	⑰	法兰或轴指向 Flange or Shaft Pointing direction.	A: 法兰或轴指向A A: Flange or shaft pointing to A. B: 法兰或轴指向B B: Flange or shaft pointing to B. A+B: 双出轴或双法兰 A+B: Double flange or shaft.
安装方式 Mounting Positions	⑱	安装方位 Mounting Position	M1、M2、M3、M4、M5、M6
	⑲	电机接线盒方位 Position for motor ter-minal box.	R、B、L、T

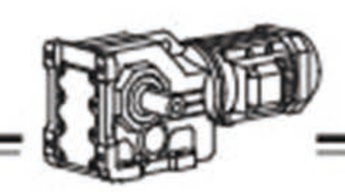

说明:

1. 基本项目不可省略;
2. 输入配置中，只能在 AM、AD 和电机之间选择一种;
3. 输出配置参数若省略，默认按A方向提供;
4. 安装方式参数若省略，默认按 M1 安装方位，R 接线盒方位提供。

Notes:

1. Basic project can not be omitted.
2. Input configuration can only be one of AM, AD and motor.
3. If no output configuration, default pointing direction will be B.
4. If not mounting position, default mounting position will be M1, default position for motor terminal will be R.

4.4 安装方位 / Mounting Positions

4.4.1 电机接线盒方位 / Position of Motor Terminal Box

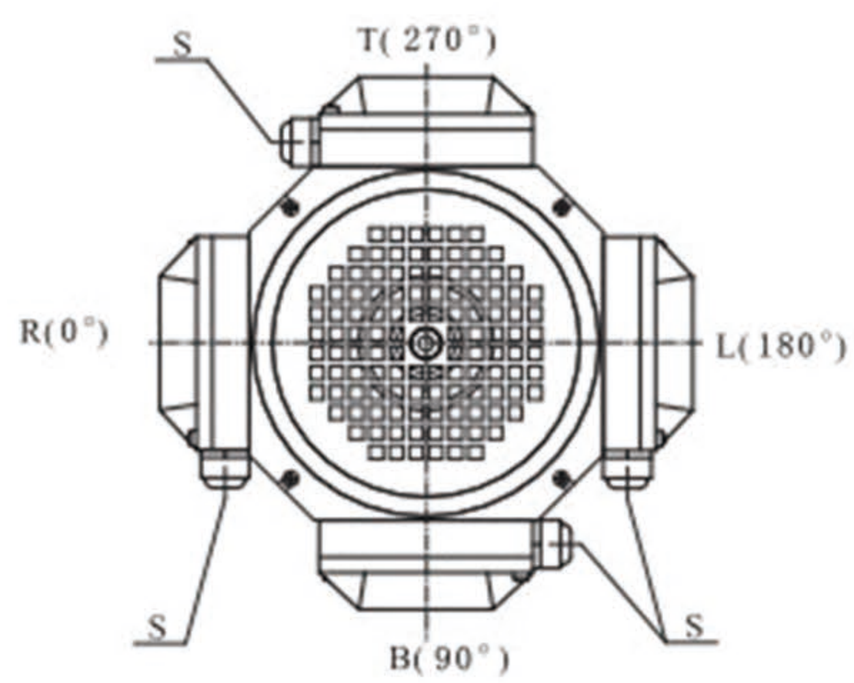

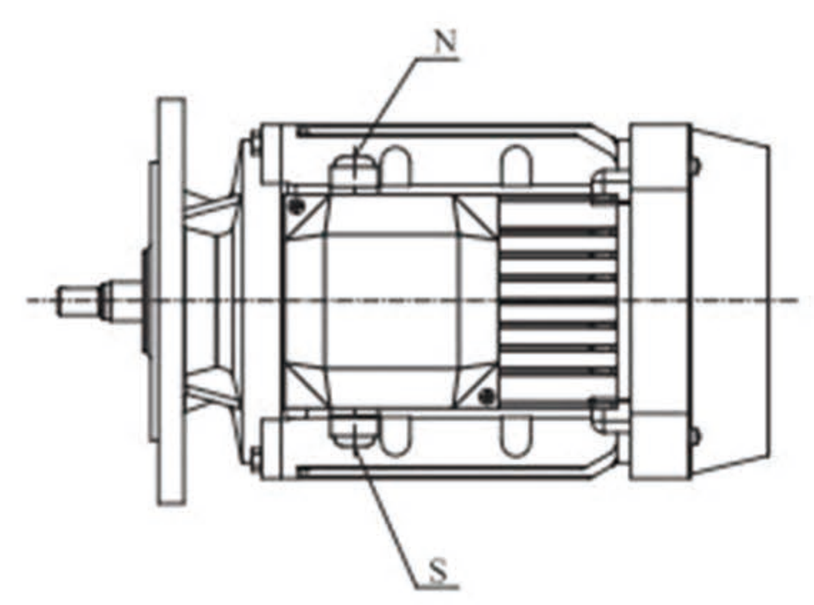

R(0°): 默认接线盒方位
R(0°): Default Position for Motor Terminal Box
注: 图为M1安装方位。
Mark :This picture is the installation position of M1

S: 默认进线方位
S: Default Line Position

说明:

上图的视图方向为: 从电机尾部的风罩向前看。

可提供R (0°)、B (90°)、L (180°)、T (270°) 四种电机接线盒方位。其中 R (0°) 位置是默认方位。如无特别说明，将按默认方位提供。

可提供 S 和 N 两种进线方位，其中 S 位置是默认方位。如无特别说明，将按默认方位提供。

Notes:

The view direction of above figure: from the fan cover in the end of the motor to look forward.

There will be four position for motor terminal box: R(0°)、B(90°)、L(180°)、T(270°). And default position is R(0°).If no special explaination, it will be provided in default position.If no special explaination, it will be provided in default position.

There will be two line position: S and N. Default position is S.If no special explaination, it will be provided in default position.If no special explaination, it will be provided in default position.

4.4.2 扭力臂方位 / Position of Torque Arm

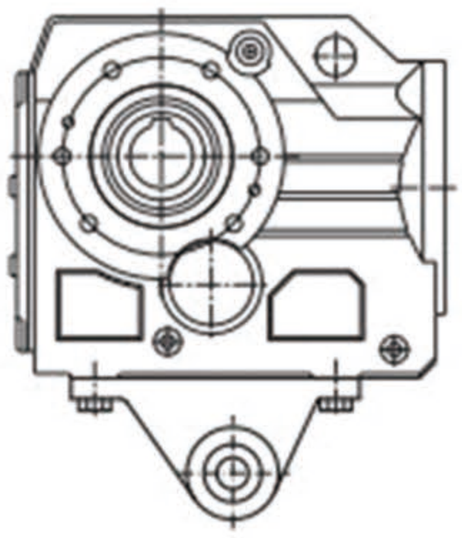

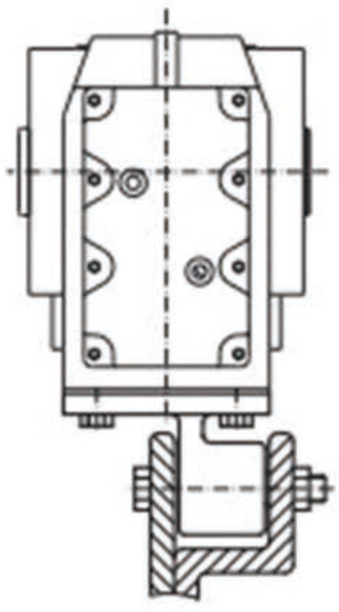

TA

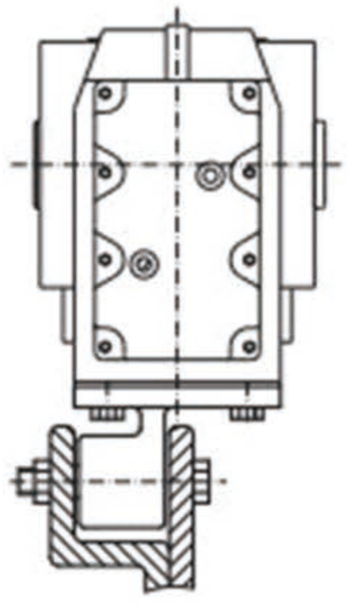

TB

说明:

扭力臂方位 TA 与 TB 是对称的。

Notes:

TA and TB are symmetrical.

4.4.3 法兰或轴指向 / Position of The Output Shaft and Flange

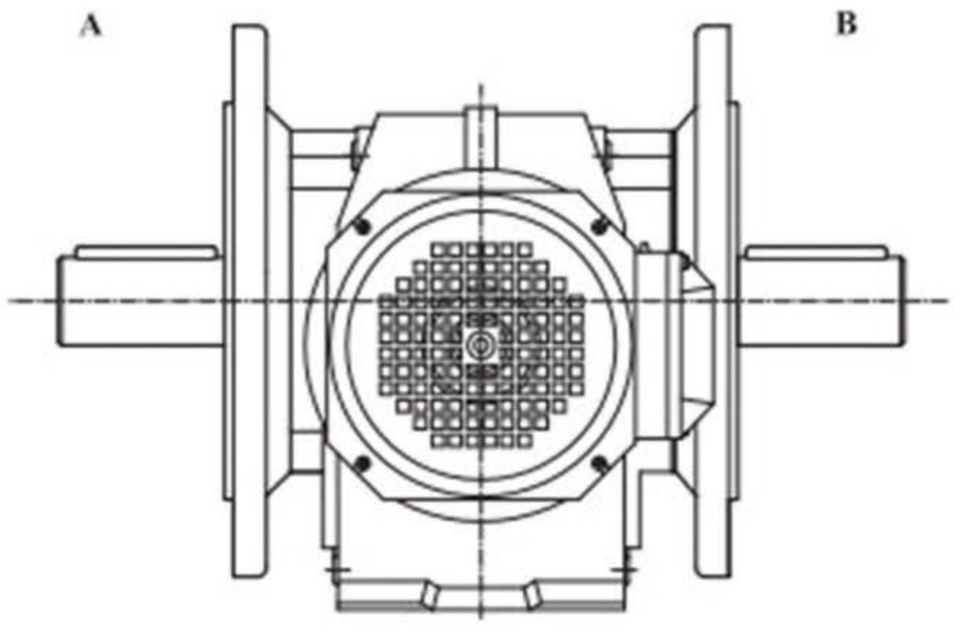

说明:

上图的视图方向为：从电机尾部的风罩向前看。

可提供 A、B 或 A+B 三种输出法兰或输出轴的方位。

Notes:

The view direction of above figure is from the fan cover in the end of the motor to look forward. There are three positions: A or B or A+B.

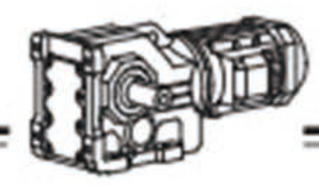

4.4.4 输出轴旋转方向 / Direction of Rotation of Output Shaft

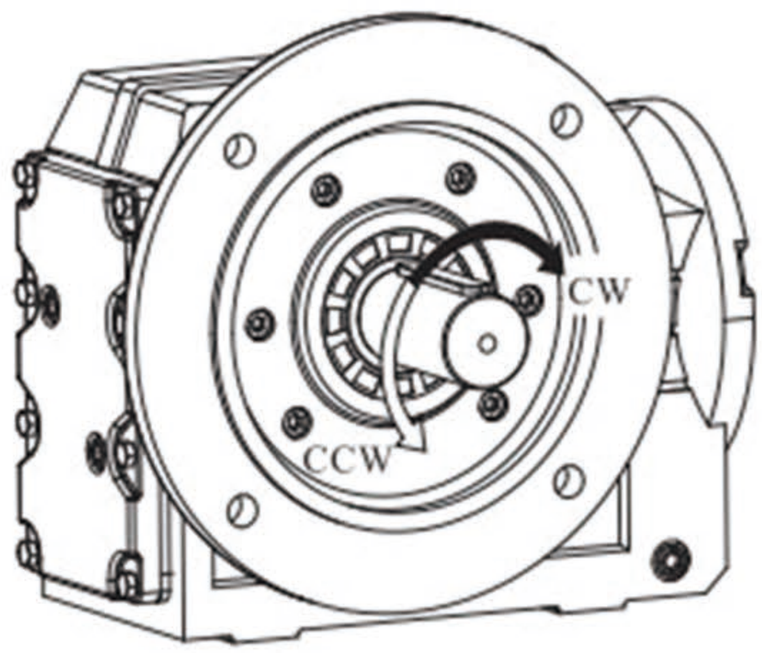

说明:

当减速电机带逆止器时，需规定输出轴的旋转方向。

上图中，从输出轴观看,顺时针旋转规定为 CW；逆时针旋转规定为 CCW。

当减速电机采用 A+B 方式输出时（见4.3），需指出给定的旋转方向是从 A 端观看还是从 B 端观看。

Notes:

It is necessary to stipulate the direction of ratation of the output shaft if the drive has a back stop.
For above figure, the following definition applies:
Looking onto the output shaft.
CW = Rotating Clockwise
CCW = Rotation Counter-clockwise
If the position of the output shaft or flange is A+B, it is necessary to stipulate for certain direction of rotation, it was looked on the A or B.

4.4.5 油位符号说明 / Oil Level Symbol Explanation

符号 Symbol	含义	Meaning
	通气帽	BREATHER VALVE
	油标	OIL LEVEL PLUG
	排油塞	OIL DRAIN PLUG

4.4.6 安装位置示意 / Mounting Position Designation

GK..安装位置示意图 / GK.. Mounting Position Designation

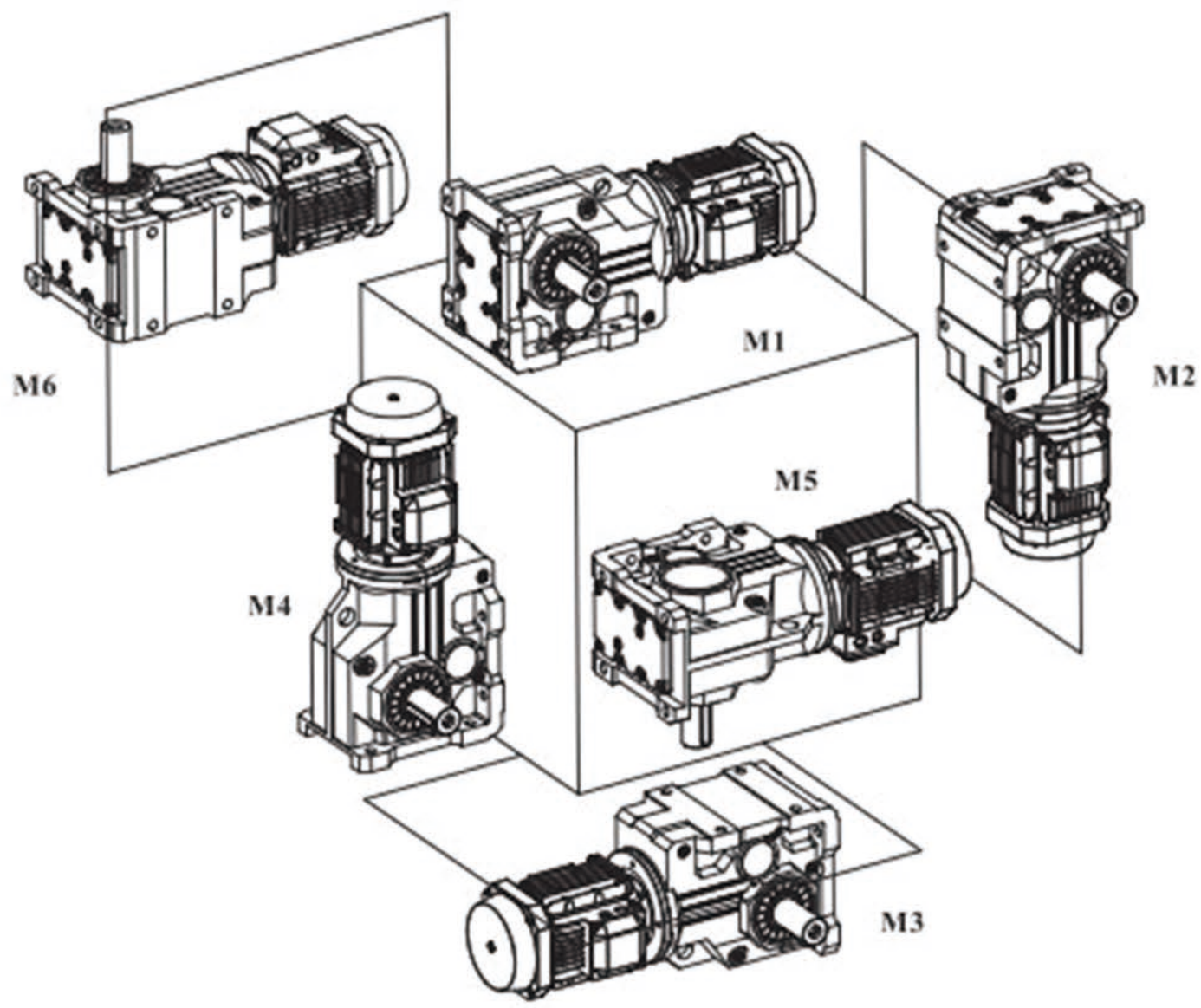

GKF..安装位置示意图 / GKF.. Mounting Position Designation

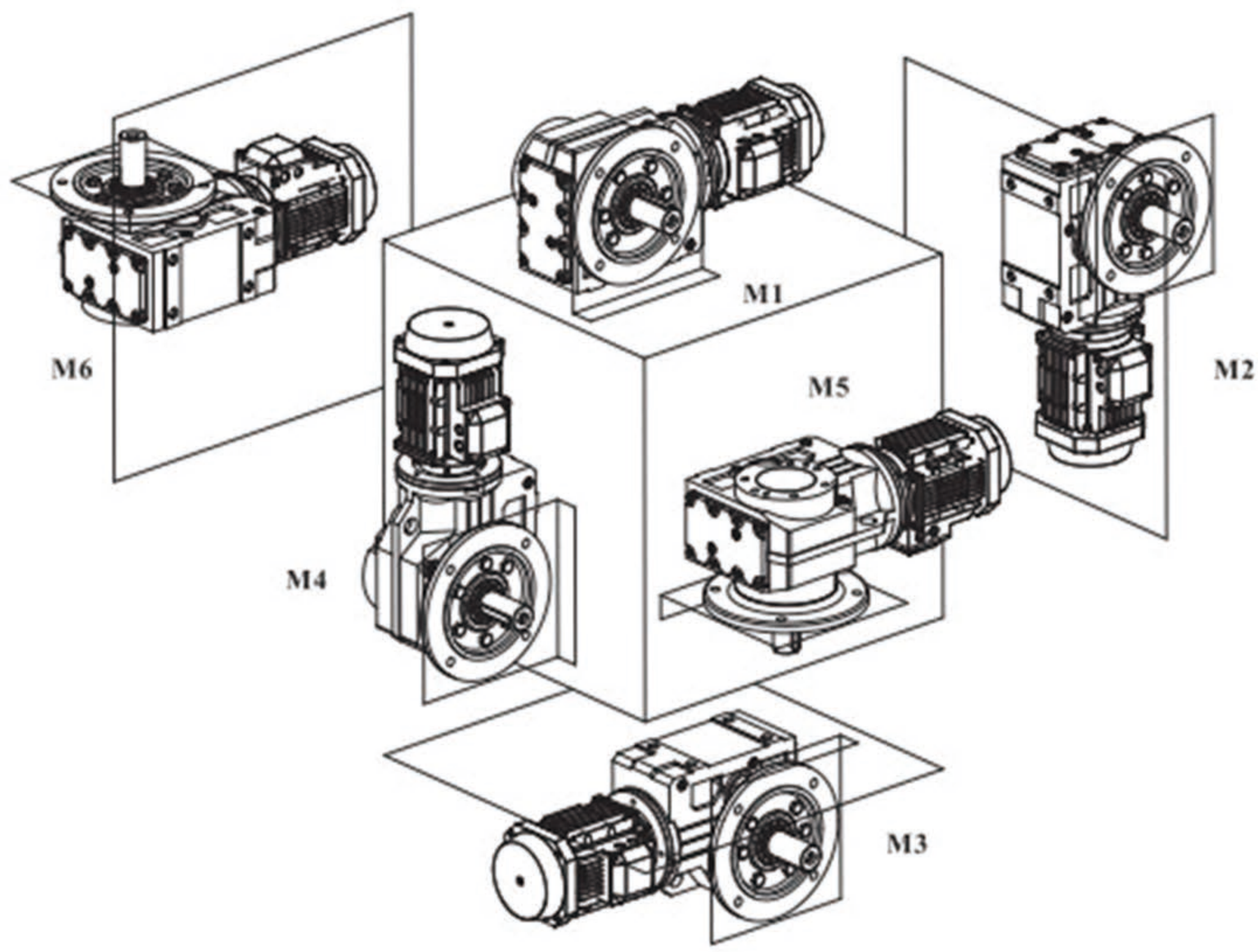

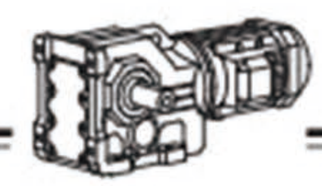

4.4.7 安装方位 / Mounting Positions

*→提示:

当采用下表列出的安装方式及输入转速时，齿轮箱会产生不可忽视的搅油损失。请联系本公司。

*→Reminder:

Increased churning losses may arise in the following mounting positions. Contact Greatwall Machinery.

安装方式 Mounting Position	齿轮箱规格 Gear Unit Size	输入转速 Input Speed（r/min）
M2，M3，M4，M5，M6	77,87,97,107	>2500
	>107	>1500

GK/GKA..B / GKH47B~157B，GKV37B~107B

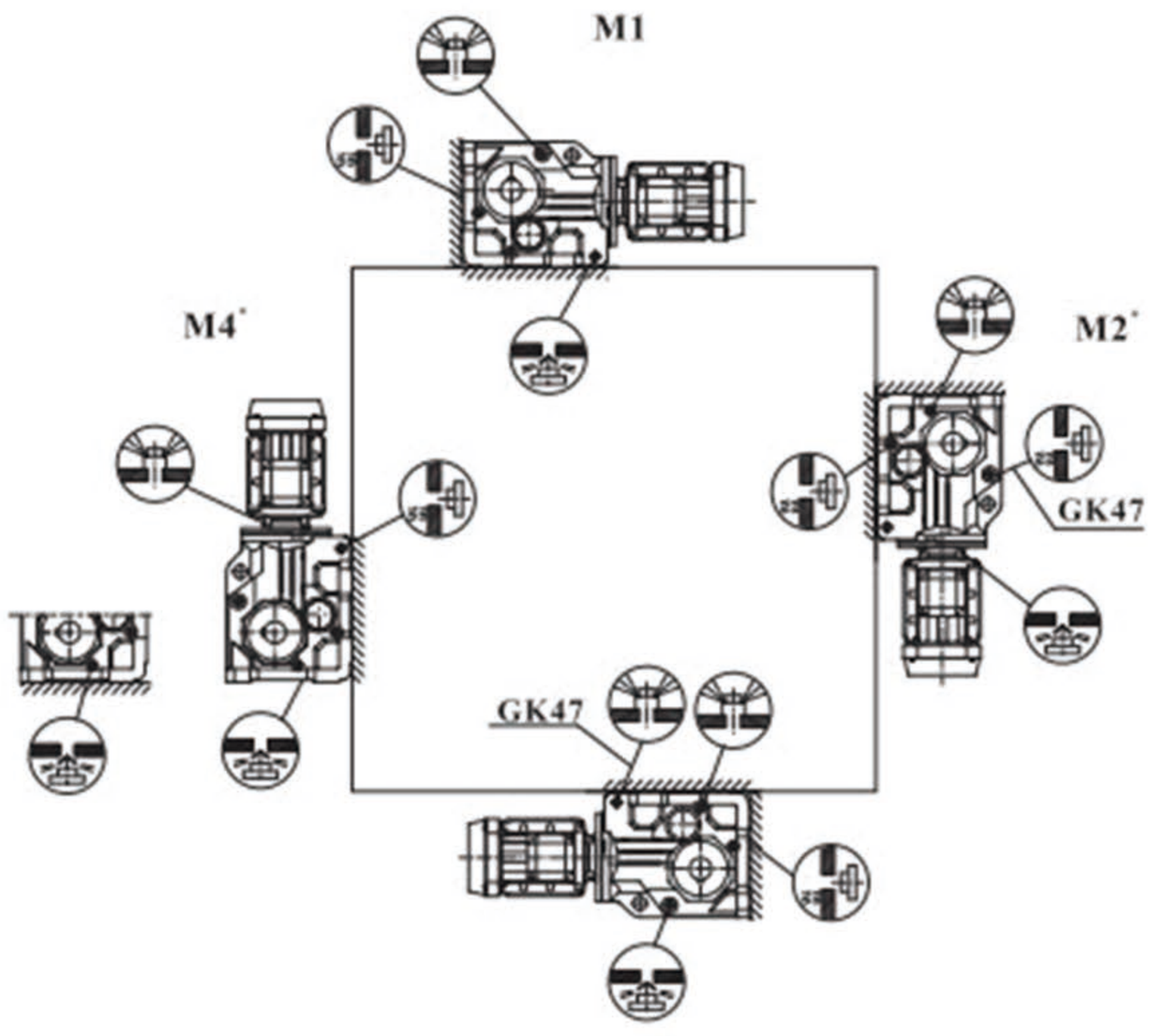

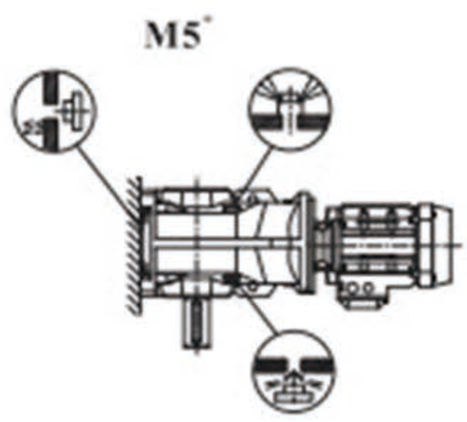

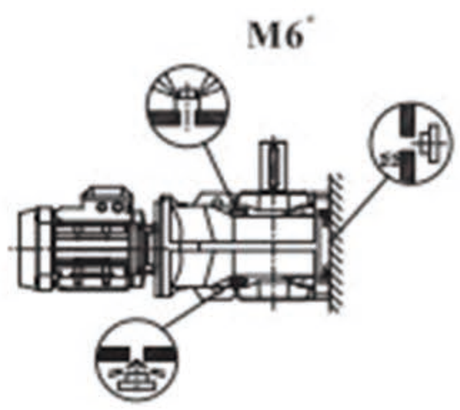

*→page 157

GK167~187,GKH167B~187B

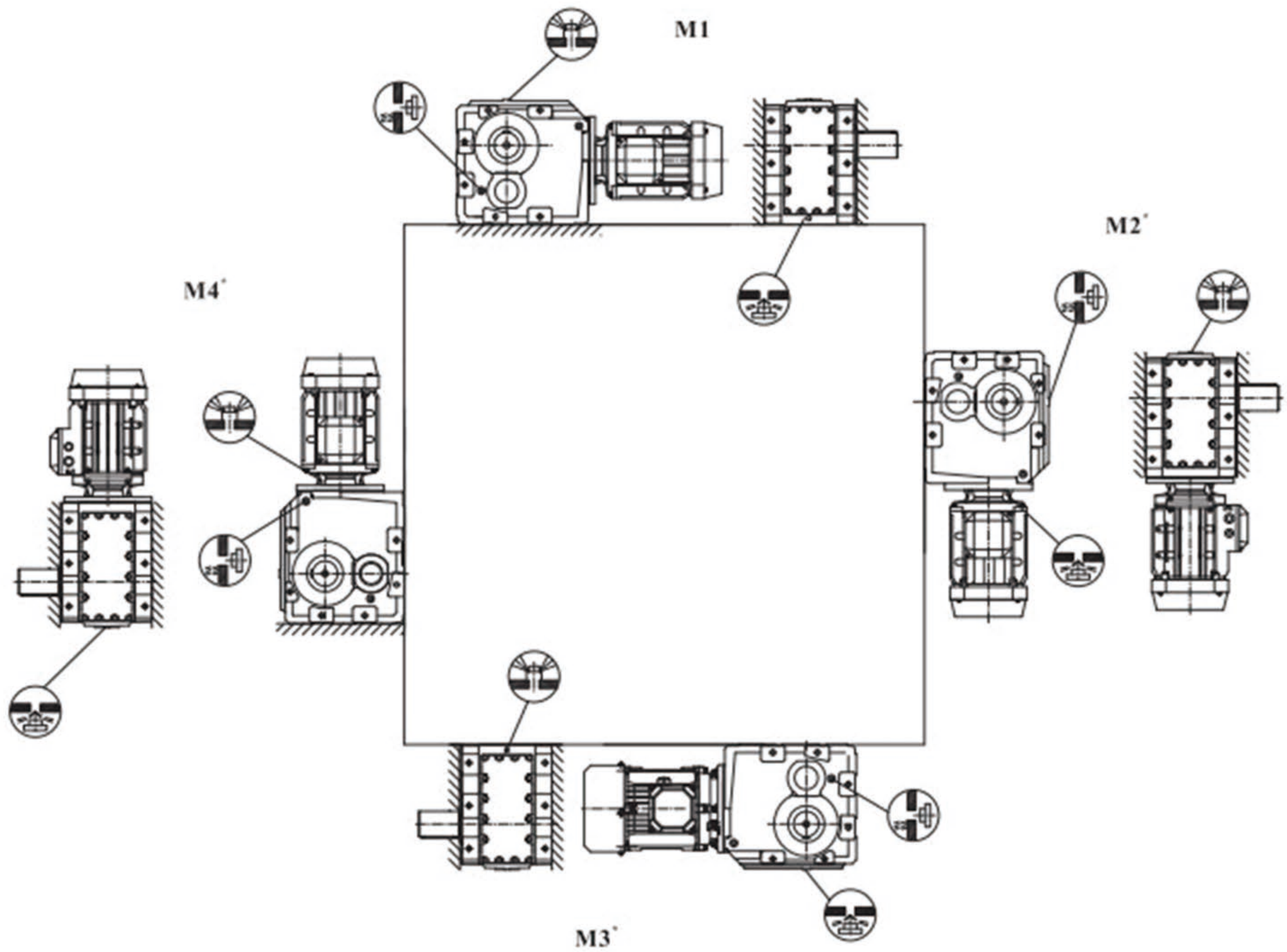

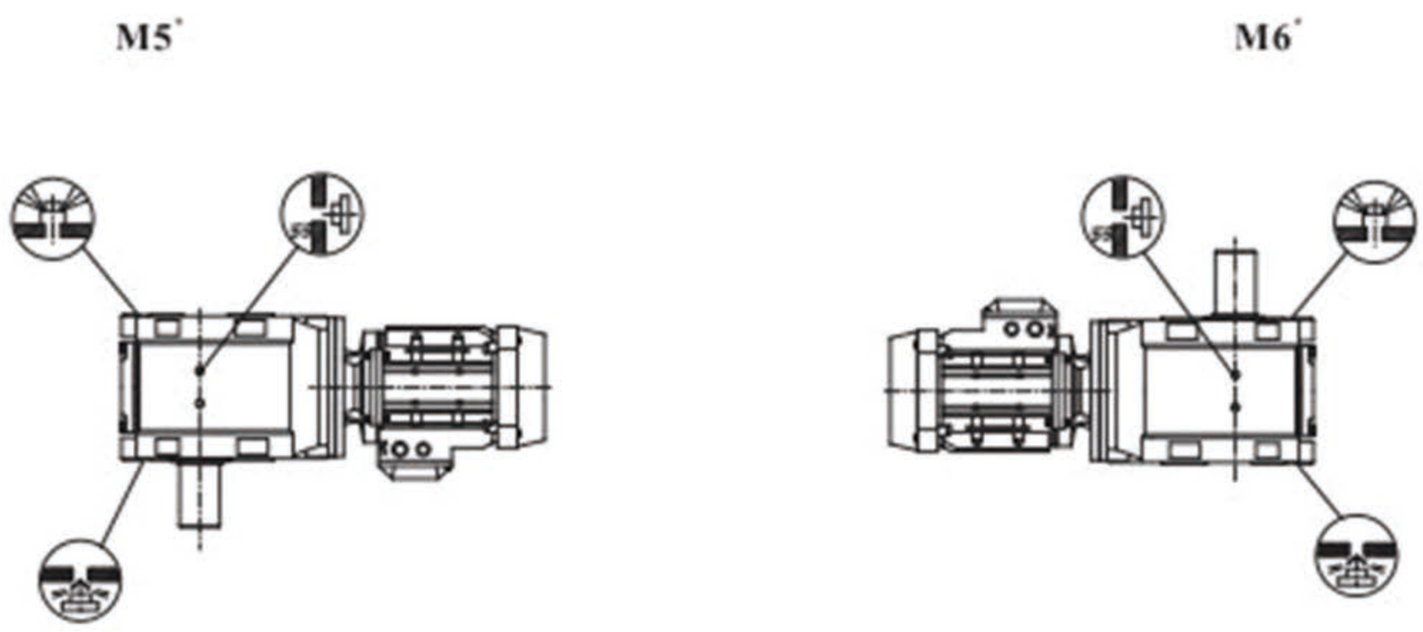

* →page 157

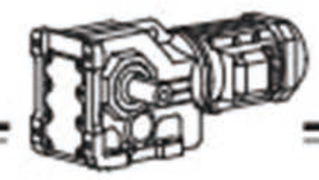

GKF/GKAF/GKHF/GKAZ/GKHZ37~157,GKVF/GKVZ37~107

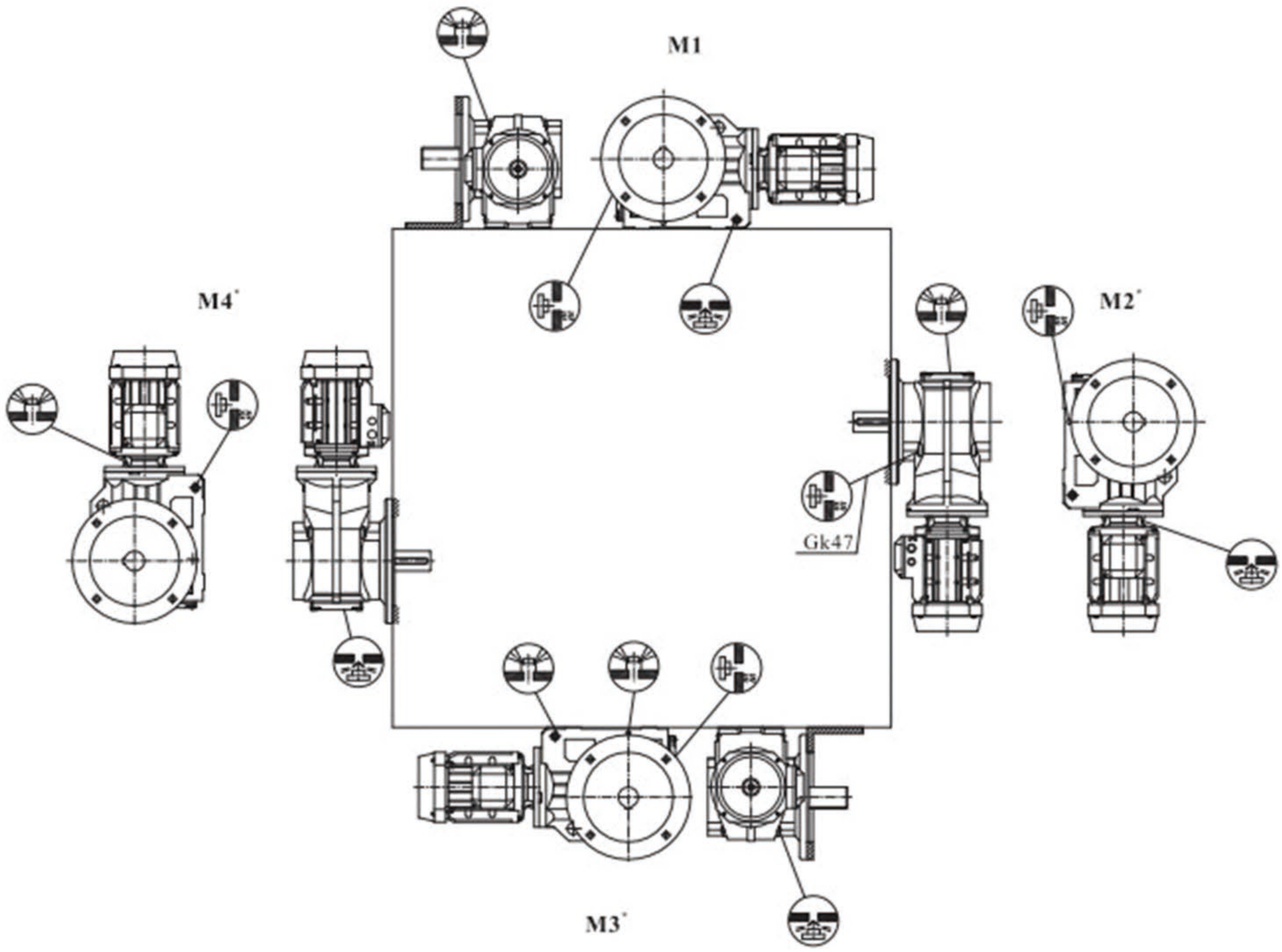

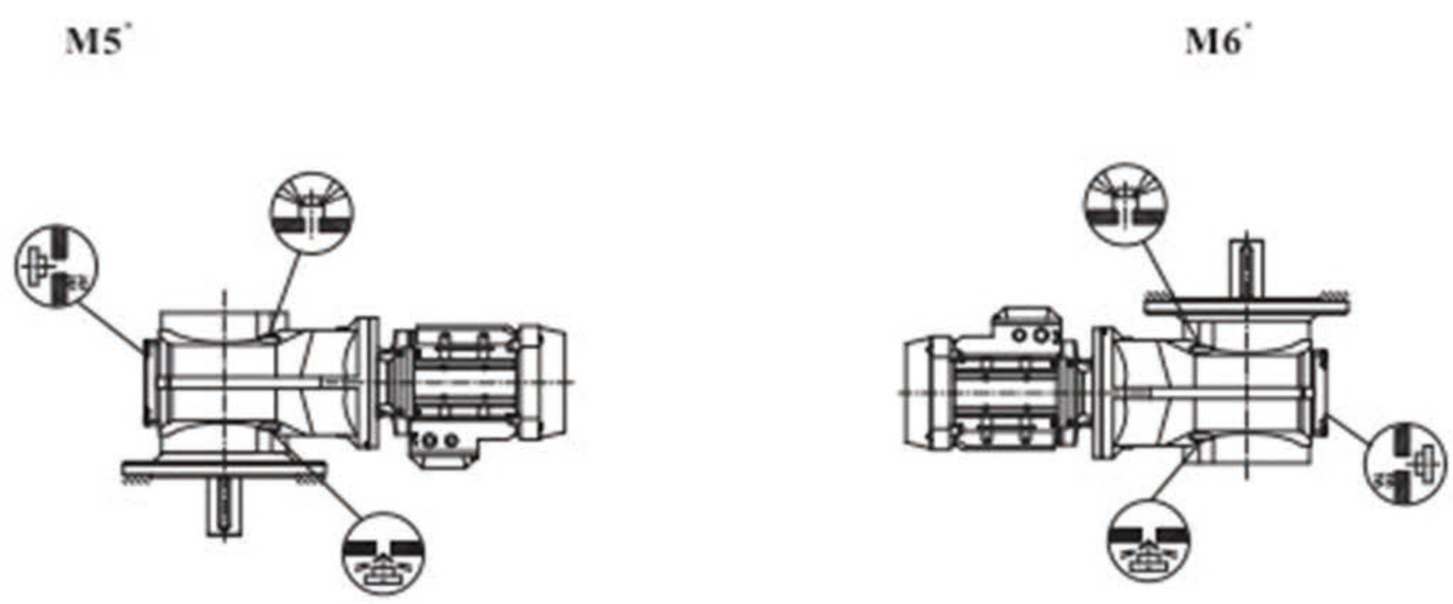

* →page 157

GK

GKA/GKH37~157,GKV37~107,GKT37~97

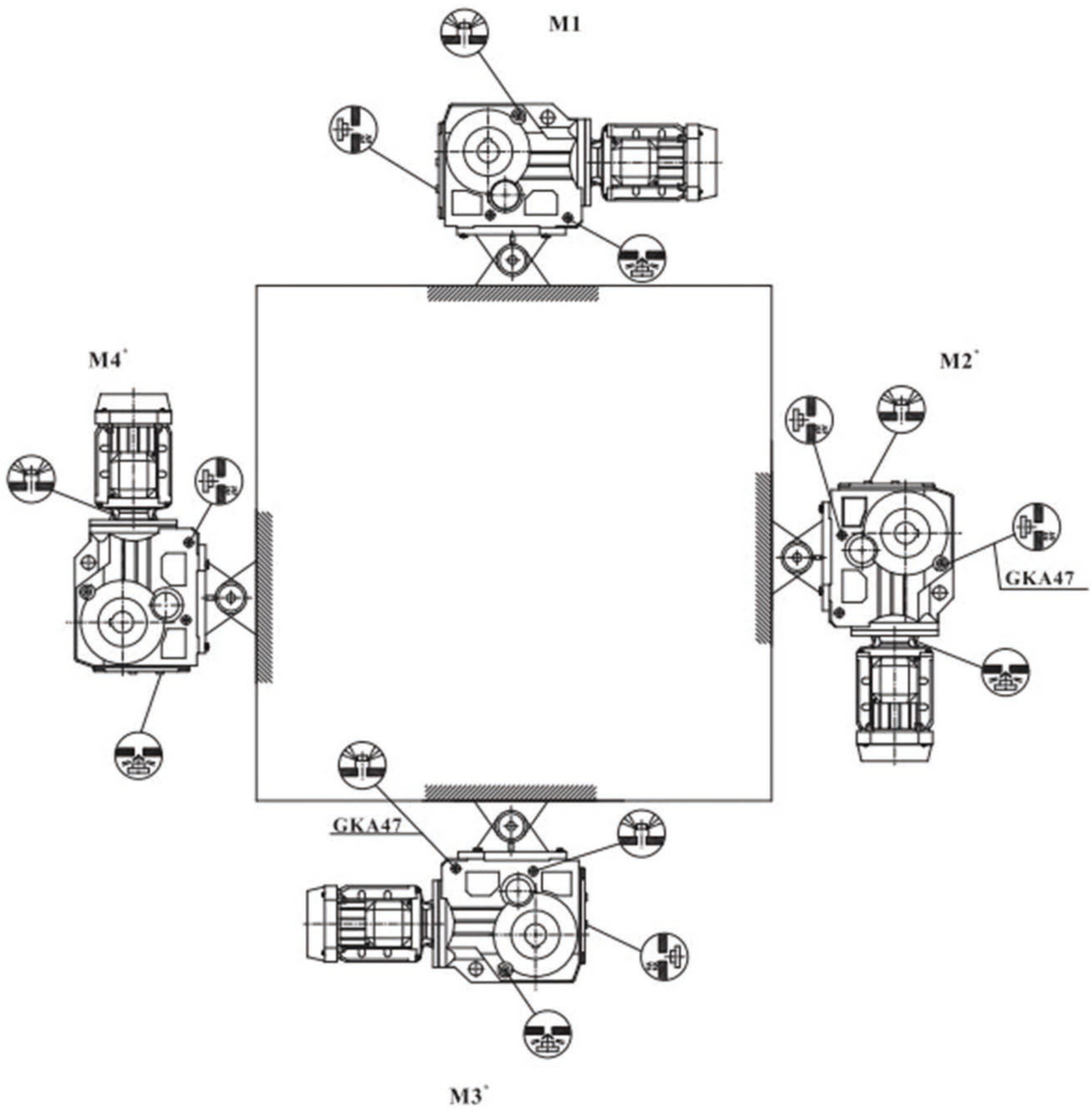

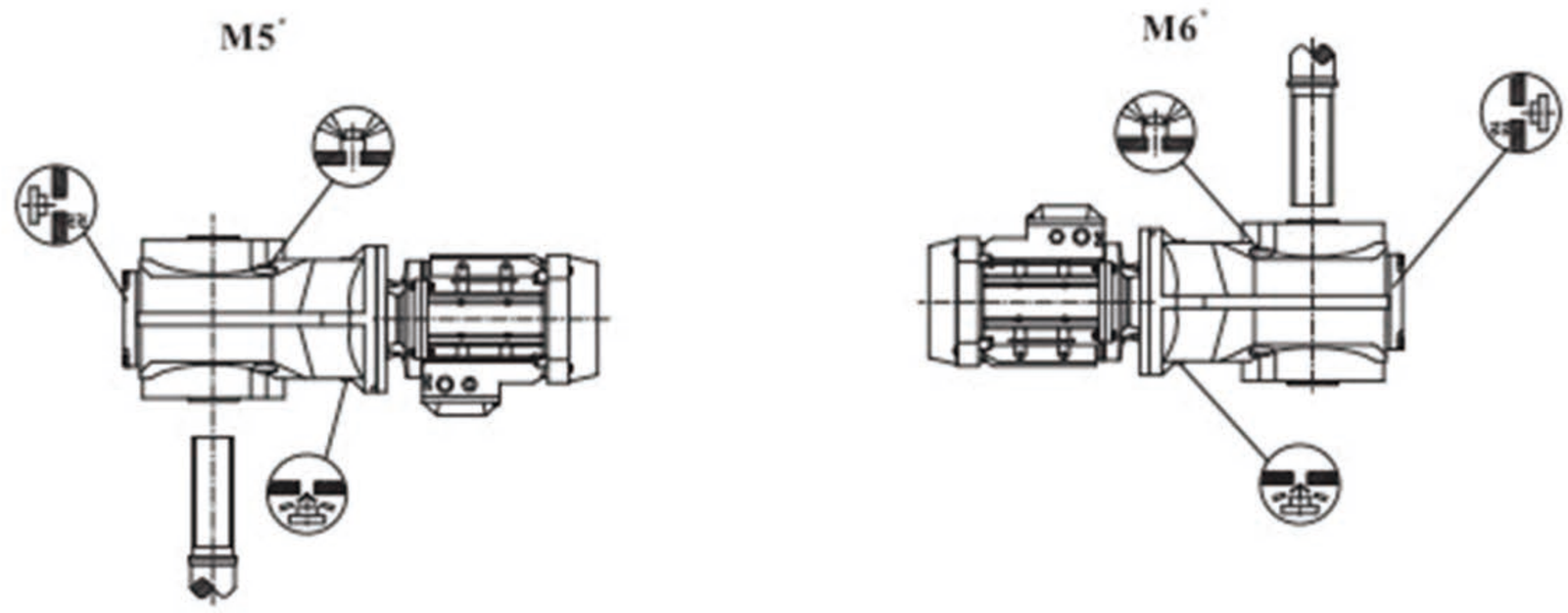

* →page 157

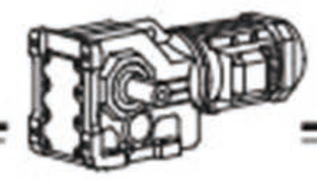

GKH167~187

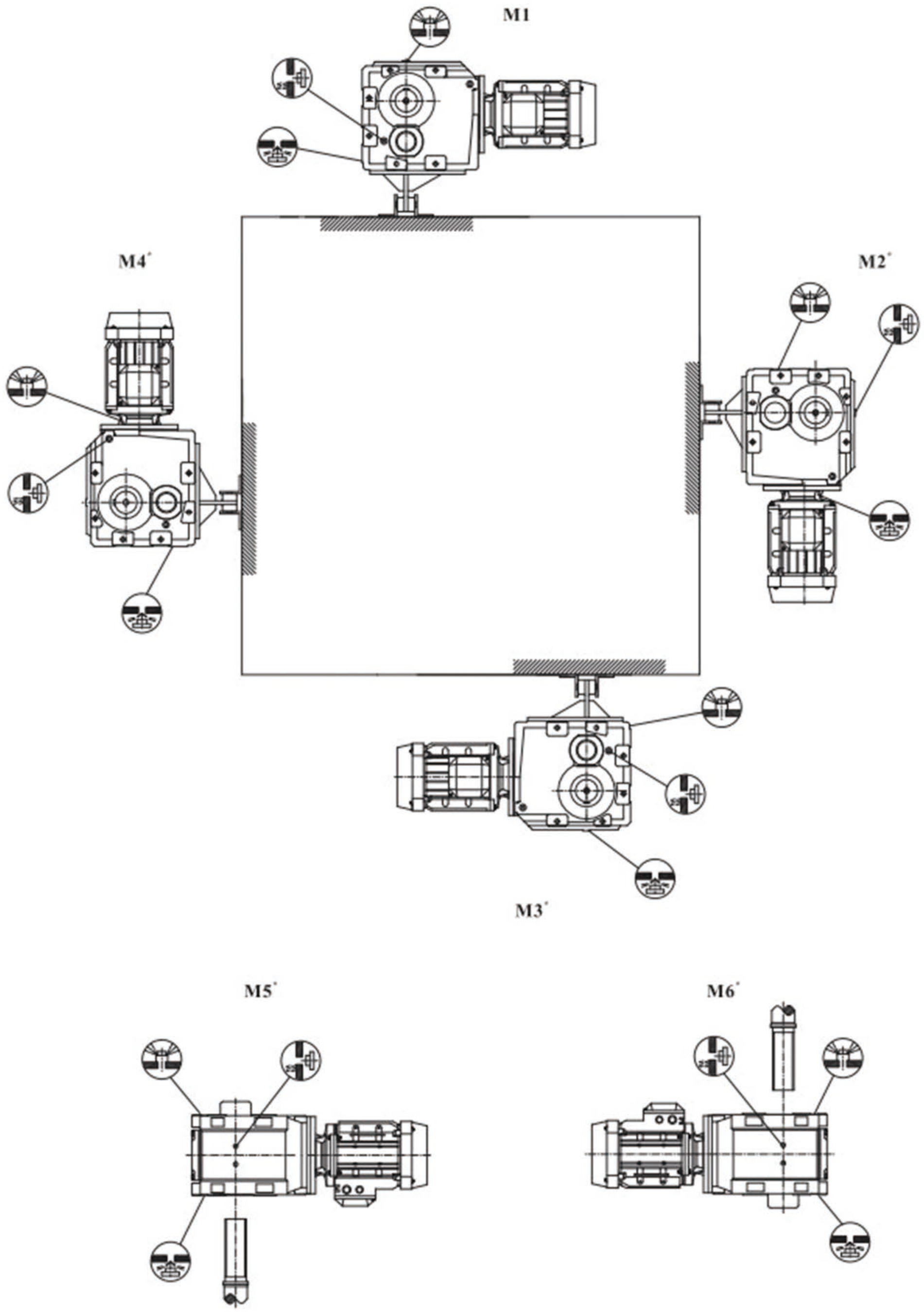

* → page 157

4.5 减速器组合表 / Gear Unit Combination Table

为得到特别低的输出转速，可以通过GRF齿轮箱与 GK 齿轮箱相连的方式实现。

当采用这种传动方案时，可配置电动机的功率依赖于减速机的极限输出扭矩，而不能通过电动机的额定功率和减速机的总传动比计算得出减速机的输出扭矩。

GRF series of gear units and GK series of gear units can be connected together to get special output speed.

For this transmission scheme, the power of the motor depends on the limit output torque of the gear-box, instead of the output torque calculated based on rated power of the motor and the transmission ratio of the gear unit.

GK..与GRF..齿轮箱可能的组合 / Possible Combination of GK.. and GRF..

	GRF17	GRF27	GRF37	GRF47	GRF57	GRF67	GRF77	GRF87	GRF97	GRF107
GK..37										
GK..47										
GK..57										
GK..67										
GK..77										
GK..87										
GK..97										
GK..107										
GK..127										
GK..157										
GK..167										
GK..187										

说明：

▭ ：表示可能的组合。

▭ ：表示不允许的组合。

Notes:

▭ : Possible Combination.

▭ : Impossible Combination.

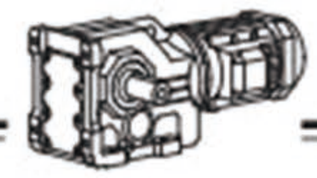

4.6 GK..功率配置 / GK..Power Configuration

GK37 n_1=1400 1/min									200Nm
n_2 [1/min]	M_{2max} [Nm]	Fr [N]	i	0.12 ~0.55	0.75 1.10	1.50	2.20		
13.0	200	5640	106.38						
14.0	200	5640	97.81						
17.0	200	5640	83.69						
19.0	200	5520	72.54						
21.0	200	5360	67.80						
24.0	200	5020	58.60						
28.0	200	4660	49.79						
31.0	200	4420	44.46						
37.0	200	4100	37.97						
39.0	200	3970	35.57						
47.0	200	3650	29.96						
49.0	200	3580	28.83						
56.0	200	3330	24.99						
60.0	195	3260	23.36						
69.0	185	3110	20.19						
82.0	180	2900	17.15						
91.0	175	2780	15.31						
107	165	2650	13.08						
115	160	2600	12.14						
133	160	2410	10.49						
157	160	2200	8.91						
176	155	2110	7.96						
206	150	1980	6.80						
220	145	1950	6.37						
261	140	1810	5.36						
352	125	1660	3.98						

GK47 n_1=1400 1/min									400Nm
n_2 [1/min]	M_{2max} [Nm]	Fr [N]	i	0.12 ~0.55	0.75 1.10	1.50	2.20 3.00		
11.0	400	5920	131.87						
12.0	400	5920	121.48						
13.0	400	5920	104.37						
15.0	400	5920	90.86						
16.0	400	5920	85.12						
19.0	400	5920	75.20						
20.0	400	5920	69.84						
22.0	400	5920	63.30						
25.0	400	5920	56.83						
29.0	400	5920	48.95						
30.0	400	5920	46.03						
35.0	400	5920	39.61						
40.0	400	5920	35.39						

GK47 n_1=1400 1/min									400Nm
n_2 [1/min]	M_{2max} [Nm]	Fr [N]	i	0.12 ~0.55	0.75 1.10	1.50	2.20 3.30		
45.0	400	5700	31.30						
48.0	400	5520	29.32						
54.0	400	5170	25.91						
58.0	400	4970	24.06						
64.0	400	4710	21.81						
72.0	400	4440	19.58						
83.0	380	4220	16.86						
88.0	380	4080	15.86						
103	360	3890	13.65						
115	350	3720	12.19						
119	280	4060	11.77						
133	280	3830	10.56						
154	280	3540	9.10						
164	270	3500	8.56						
190	250	3380	7.36						
213	240	3270	6.58						
241	230	3140	5.81						
302	205	2980	4.64						

GK57 n_1=1400 1/min									600Nm
n_2 [1/min]	M_{2max} [Nm]	Fr [N]	i	0.12 ~0.55	0.75 1.10	1.50	2.20 3.30	4.00	
9.60	600	7630	145.14						
11.0	600	7630	123.85						
13.0	600	7630	108.29						
14.0	600	7630	102.88						
16.0	600	7630	90.26						
18.0	600	7630	76.56						
20.0	600	7630	69.12						
23.0	600	7630	60.81						
24.0	600	7630	57.42						
29.0	600	7630	48.89						
32.0	600	7630	44.43						
36.0	600	7630	38.49						
39.0	600	7630	35.70						
46.0	600	7300	30.28						
51.0	600	6930	27.34						
58.0	600	6480	24.05						
62.0	600	6280	22.71						
72.0	575	5910	19.34						
80.0	555	5740	17.57						
92.0	535	5430	15.22						
106	510	5190	13.25						

GK57 n_1=1400 1/min									600Nm
n_2 [1/min]	M_{2max} [Nm]	Fr [N]	i	0.12 ~0.55	0.75 1.10	1.50	2.20 3.30	4.00	
117	415	5150	11.92						
124	415	4990	11.26						
146	405	4650	9.59						
161	390	4520	8.71						
185	365	4360	7.55						
213	345	4180	6.57						
299	300	3800	4.69						

GK67 n_1=1400 1/min									820Nm
n_2 [1/min]	M_{2max} [Nm]	Fr [N]	i	0.18 ~0.55	0.75 1.10	1.50	2.20 3.30	4.00	5.50
9.70	820	10300	144.79						
11.0	820	10300	123.54						
13.0	820	10300	108.03						
14.0	820	10300	102.62						
16.0	820	10300	90.04						
18.0	820	10300	76.37						
20.0	820	10300	68.95						
23.0	820	10300	60.66						
24.0	820	10300	57.28						
29.0	820	10300	48.77						
32.0	820	10300	44.32						
36.0	820	10500	38.39						
39.0	820	10300	35.62						
46.0	820	10300	30.22						
51.0	820	10300	27.28						
58.0	800	10500	24.00						
62.0	780	10700	22.66						
73.0	760	10800	19.30						
80.0	740	11000	17.54						
92.0	700	11300	15.19						
106	670	11500	13.22						
112	530	12300	12.48						
132	500	11800	10.63						
145	480	11500	9.66						
167	440	11100	8.37						
192	420	10700	7.28						
269	350	9860	5.20						

GK77 n_1=1400 1/min									1550Nm
n_2 [1/min]	M_{2max} [Nm]	Fr [N]	i	0.37 0.55	0.75 1.10	1.50	2.20 3.30	4.00	5.50 7.50
7.30	1450	16100	192.18						
7.80	1450	16100	179.37						
9.10	1550	15400	154.02						

GK77 n_1=1400 1/min									1550Nm
n_2 [1/min]	M_{2max} [Nm]	Fr [N]	i	0.37 0.55	0.75 1.10	1.50	2.20 3.30	4.00	5.50 7.50
10.0	1550	15400	135.28						
11.0	1550	15400	128.52						
12.0	1550	15400	113.56						
14.0	1550	15400	97.05						
16.0	1550	15400	88.97						
18.0	1550	15400	78.07						
19.0	1550	15400	73.99						
22.0	1550	15400	64.75						
24.0	1550	15400	58.34						
27.0	1550	15400	51.18						
31.0	1550	15400	45.16						
35.0	1550	15400	40.04						
36.0	1550	15700	38.39						
40.0	1550	15400	35.20						
45.0	1550	15400	30.89						
48.0	1550	15400	29.27						
55.0	1550	15400	25.62						
61.0	1550	15400	23.08						
69.0	1500	15700	20.25						
78.0	1450	16100	17.87						
88.0	1400	15500	15.84						
104	1340	14800	13.52						
113	1000	15100	12.36						
129	990	14400	10.84						
146	940	13900	9.56						
165	890	13500	8.48						
193	820	13100	7.24						

GK77 n_1=1400 1/min									1550Nm
n_2 [1/min]	M_{2max} [Nm]	Fr [N]	i	11.0					
7.30	1450	16100	192.18						
7.80	1450	16100	179.37						
9.10	1550	15400	154.02						
10.0	1550	15400	135.28						
11.0	1550	15400	128.52						
12.0	1550	15400	113.56						
14.0	1550	15400	97.05						
16.0	1550	15400	88.97						
18.0	1550	15400	78.07						
19.0	1550	15400	73.99						
22.0	1550	15400	64.75						
24.0	1550	15400	58.43						
27.0	1550	15400	51.18						
31.0	1550	15400	45.16						

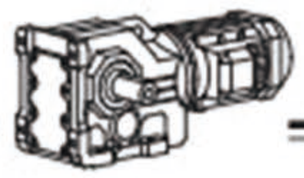

GK77 n_1=1400 1/min — 1550Nm

n_2 [1/min]	M_{2max} [Nm]	Fr [N]	i	11.0
35.0	1550	15400	40.04	
36.0	1550	15700	38.39	
40.0	1550	15400	35.20	
45.0	1550	15400	30.89	
48.0	1550	15400	29.27	
55.0	1550	15400	25.62	
61.0	1550	15400	23.08	
69.0	1500	15700	20.25	
78.0	1450	16100	17.87	
88.0	1400	15500	15.84	
104	1340	14800	13.52	
113	1000	15100	12.36	
129	990	14400	10.84	
146	940	13900	9.56	
165	890	13500	8.48	
193	820	13100	7.24	

GK87 n_1=1400 1/min — 2700Nm

n_2 [1/min]	M_{2max} [Nm]	Fr [N]	i	7.5 11.0	1.50	2.20 3.00	4.00	5.50 7.50	11.0 15.0
7.10	2700	27300	197.37						
8.00	2700	27300	174.19						
8.50	2700	27300	164.34						
9.50	2700	27300	147.32						
11.0	2700	27300	126.91						
12.0	2700	27300	115.82						
14.0	2700	27300	102.71						
16.0	2700	27300	86.34						
18.0	2700	27300	79.34						
20.0	2700	27300	70.46						
22.0	2700	26200	63.00						
25.0	2700	25000	56.64						
28.0	2700	23500	49.16						
32.0	2600	22800	44.02						
38.0	2500	21400	36.52						
45.0	2700	19200	31.39						
50.0	2600	18500	27.88						
56.0	2500	18000	24.92						
62.0	2300	17900	22.41						
72.0	2300	16800	19.45						
80.0	2200	16300	17.42						
88.0	1800	16000	16.00						
97.0	2100	15300	14.45						
111	2000	14800	12.56						
125	1500	14900	11.17						

GK87 n_1=1400 1/min — 2700Nm

n_2 [1/min]	M_{2max} [Nm]	Fr [N]	i	7.5 11.0	1.50	2.20 3.00	4.00	5.50 7.50	11.0 15.0
140	1500	14200	10.00						
169	1400	13500	8.29						
194	1300	13200	7.21						

GK87 n_1=1400 1/min — 2700Nm

n_2 [1/min]	M_{2max} [Nm]	Fr [N]	i	18.5 22.0
7.10	2700	27300	197.37	
8.00	2700	27300	174.19	
8.50	2700	27300	164.34	
9.50	2700	27300	147.32	
11.0	2700	27300	126.91	
12.0	2700	27300	115.82	
14.0	2700	27300	102.71	
16.0	2700	27300	86.34	
18.0	2700	27300	79.34	
20.0	2700	27300	70.46	
22.0	2700	26200	63.00	
25.0	2700	25000	56.64	
28.0	2700	23500	49.16	
32.0	2600	22800	44.02	
38.0	2500	21400	36.52	
45.0	2700	19200	31.39	
50.0	2600	18500	27.88	
56.0	2500	18000	24.92	
62.0	2300	17900	22.41	
72.0	2300	16800	19.45	
80.0	2200	16300	17.42	
88.0	1800	16000	16.00	
97.0	2100	15300	14.45	
111	2000	14800	12.56	
125	1500	14900	11.17	
140	1500	14200	10.00	
169	1400	13500	8.29	
194	1300	13200	7.21	

GK97 n_1=1400 1/min — 4300Nm

n_2 [1/min]	M_{2max} [Nm]	Fr [N]	i	1.10	1.50	2.20 3.00	4.00	5.50 7.50	11.0 15.0
8.00	4300	40000	176.05						
9.10	4300	40000	153.21						
10.0	4300	40000	140.28						
11.0	4300	40000	123.93						
13.0	4300	40000	105.13						
14.0	4300	40000	96.80						

GK97 n_1=1400 1/min									4300Nm
n_2 [1/min]	M_{2max} [Nm]	Fr [N]	i	1.10	1.50	2.20 3.00	4.00	5.50 7.50	11.0 15.0
16.0	4300	38800	86.52						
18.0	4300	37100	77.89						
20.0	4300	35600	70.54						
22.0	4300	33800	62.55						
25.0	4300	32300	56.55						
29.0	4300	30000	47.93						
33.0	4300	28300	41.87						
37.0	4300	27100	38.30						
41.0	4300	25700	34.23						
45.0	4300	24500	30.82						
50.0	4300	23300	27.91						
57.0	4300	22000	24.75						
63.0	4300	20900	22.37						
74.0	4300	19100	18.96						
85.0	4300	17800	16.56						
101	4300	16100	13.85						
117	3890	16200	11.99						
134	2870	16400	10.41						
161	2660	15800	8.71						
186	2400	15700	7.54						

GK97 n_1=1400 1/min									4300Nm
n_2 [1/min]	M_{2max} [Nm]	Fr [N]	i	18.5 22.0	30.0				
8.00	4300	40000	176.05						
9.10	4300	40000	153.21						
10.0	4300	40000	140.28						
11.0	4300	40000	123.93						
13.0	4300	40000	105.13						
14.0	4300	40000	96.80						
16.0	4300	38800	86.52						
18.0	4300	37100	77.89						
20.0	4300	35600	70.54						
22.0	4300	33800	62.55						
25.0	4300	32300	56.55						
29.0	4300	30000	47.93						
33.0	4300	28300	41.87						
37.0	4300	27100	38.30						
41.0	4300	25700	34.23						
45.0	4300	24500	30.82						
50.0	4300	23300	27.91						
57.0	4300	22000	24.75						
63.0	4300	20900	22.37						
74.0	4300	19100	18.96						
85.0	4300	17800	16.56						

GK97 n_1=1400 1/min									4300Nm
n_2 [1/min]	M_{2max} [Nm]	Fr [N]	i	18.5 22.0	30.0				
101	4300	16100	13.85						
117	3890	16200	11.99						
134	2870	16400	10.41						
161	2660	15800	8.71						
186	2400	15700	7.54						

GK107 n_1=1400 1/min									8000Nm
n_2 [1/min]	M_{2max} [Nm]	Fr [N]	i	3.00	4.00	5.50 7.50	11.0 15.0	18.5 22.0	30.0 ~45.0
9.80	8000	65000	143.47						
12.0	8000	61500	121.46						
12.0	8000	59300	112.41						
14.0	8000	56200	100.75						
15.0	8000	53500	90.96						
17.0	8000	50900	82.61						
19.0	8000	47900	73.30						
21.0	8000	45400	66.52						
24.0	8000	41700	57.17						
28.0	7840	39300	49.90						
33.0	7360	37900	42.33						
38.0	7200	35800	37.00						
43.0	7200	33200	32.69						
45.0	6800	34200	31.28						
48.0	7200	30700	29.00						
53.0	7200	28800	26.32						
62.0	7200	25800	22.62						
71.0	7200	23200	19.74						
84.0	7050	21000	16.75						
96.0	6890	19500	14.64						
104	4300	29200	13.43						
119	4300	27500	11.73						
141	4190	25800	9.94						
161	4070	24600	8.69						
190	3600	24400	7.35						

GK127 n_1=1400 1/min									13000Nm
n_2 [1/min]	M_{2max} [Nm]	Fr [N]	i	7.50	11.0 15.0	18.5 22.0	30.0 ~45.0	55.0 ~90.0	
9.60	13000	79200	146.07						
10.0	13000	79200	136.14						
11.0	13000	79200	122.48						
13.0	13000	79200	110.18						
16.0	13000	75100	89.89						
17.0	13000	72100	81.98						
20.0	13000	67700	70.95						

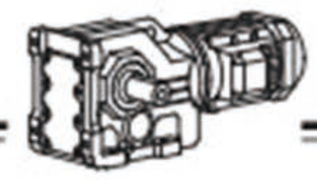

GK127 n_1=1400 1/min — 13000Nm

n_2 [1/min]	M_{2max} [Nm]	Fr [N]	i	7.50	11.0 15.0	18.5 22.0	30.0 ~45.0	55.0 ~90.0	
22.0	13000	64000	62.60						
26.0	13000	59800	54.07						
29.0	13000	56500	47.82						
35.0	13000	52000	40.19						
39.0	13000	49400	36.25						
45.0	13000	45900	31.37						
51.0	13000	43000	27.68						
59.0	13000	39800	23.91						
66.0	13000	37200	21.15						
79.0	13000	32600	17.77						
98.0	12100	31000	14.35						
109	8530	35400	12.79						
130	8000	33900	10.74						
161	7230	32500	8.68						

GK157 n_1=1400 1/min — 18000Nm

n_2 [1/min]	M_{2max} [Nm]	Fr [N]	i	11.0 15.0	18.5 22.0	30.0 ~45.0	55.0 ~90.0	110 132	160
9.30	18000	112200	150.41						
11.0	18000	106500	122.39						
14.0	18000	98000	100.22						
15.0	18000	94400	91.65						
18.0	18000	88900	79.75						
20.0	18000	84200	70.38						
23.0	18000	79000	61.02						
26.0	18000	74900	54.29						
30.0	18000	70000	46.79						
37.0	18000	63400	38.02						
45.0	18000	57500	31.30						
51.0	18000	54000	27.62						
58.0	18000	50000	23.95						
66.0	18000	47000	21.31						
76.0	18000	43200	18.37						
94.0	18000	38200	14.92						
111	17000	36700	12.65						

GK167 n_1=1400 1/min — 32000Nm

n_2 [1/min]	M_{2max} [Nm]	Fr [N]	i	11.0 15.0	18.5 22.0	30.0 ~45.0	55.0 ~90.0	110 132	160
8.50	32000	150000	164.50						
10.0	32000	150000	134.99						
13.0	32000	150000	109.83						
16.0	32000	147200	87.86						
18.0	32000	140100	78.14						
21.0	32000	132000	68.07						

GK167 n_1=1400 1/min — 32000Nm

n_2 [1/min]	M_{2max} [Nm]	Fr [N]	i	11.0 15.0	18.5 22.0	30.0 ~45.0	55.0 ~90.0	110 132	160
23.0	32000	125600	60.74						
27.0	32000	117000	51.77						
33.0	32000	107400	42.89						
38.0	32000	99700	36.61						
43.0	32000	93700	32.25						
49.0	32000	88600	28.77						
57.0	32000	81700	24.52						
69.0	32000	74000	20.32						
81.0	32000	67900	17.34						

GK187 n_1=1400 1/min — 50000Nm

n_2 [1/min]	M_{2max} [Nm]	Fr [N]	i	18.5 22.0	30.0 ~45.0	55.0 ~90.0	110 132	160	
7.80	50000	190000	179.86						
8.50	50000	190000	165.21						
9.70	50000	190000	144.59						
11.0	50000	188200	129.69						
12.0	50000	177200	112.60						
14.0	50000	169900	102.16						
16.0	50000	159000	88.00						
19.0	50000	147000	73.96						
22.0	50000	137600	64.04						
26.0	50000	126100	53.36						
31.0	50000	116600	45.50						
33.0	50000	112700	42.51						
36.0	50000	107200	38.57						
42.0	50000	99100	33.23						
50.0	50000	90200	27.92						
58.0	47600	86800	24.18						
69.0	43900	84000	20.15						
81.0	41400	80800	17.18						

4.7 GK..性能参数 / GK.. Performance Parameters

n_2 [1/min]	M_2 [Nm]	i	Fr [N]	K	Frame size		Input Configuration
P_1=0.12kw							
0.08	10800	17550	80300	1.20	GK GKF GKA GKAF	127 GRF77 127 GRF77 127 GRF77 127 GRF77	Y..63M$_1$-4 AM63 AD2
0.09	9890	16006	80700	1.30			
0.09	9260	14975	81000	1.40			
0.11	7690	12440	81600	1.70			
0.13	6750	10915	81900	1.95			
0.14	6070	9819	82000	2.10			
0.16	5180	8443	82300	2.50			
0.18	4620	7482	82400	2.80			
0.10	8850	14311	65000	0.90	GK GKF GKA GKAF	107 GRF77 107 GRF77 107 GRF77 107 GRF77	Y..63M$_1$-4 AM63 AD2
0.11	7550	12211	65000	1.05			
0.13	6600	10677	65000	1.20			
0.14	5890	9524	65000	1.35			
0.17	5150	8328	65000	1.55			
0.19	4490	7270	65000	1.80			
0.22	3700	6184	65000	2.20			
0.24	3210	5662	65000	2.50			
0.27	2910	5138	65000	2.70			
0.32	2670	4359	65000	3.00			
0.17	5460	8054	39400	0.80	GK GKF GKA GKAF	97 GRF57 97 GRF57 97 GRF57 97 GRF57	Y..63M$_1$-4 AM63 AD2
0.20	4420	6970	40000	0.95			
0.23	4000	6027	40000	1.05			
0.26	3650	5391	40000	1.20			
0.30	3020	4669	40000	1.40			
0.34	2730	4082	40000	1.55			
0.39	2370	3583	40000	1.80			
0.44	2090	3108	40000	2.00			
0.50	1770	2757	40000	2.40			
0.57	1650	2419	40000	2.60			
0.65	1420	2123	40000	3.00			
0.74	1270	1856	40000	3.40			
0.85	1040	1625	40000	4.10			
0.96	890	1430	40000	4.80			
1.10	860	1261	40000	5.00	GK GKF GKA GKAF	97 GRF57 97 GRF57 97 GRF57 97 GRF57	Y..63M$_1$-4 AM63 AD2
1.20	755	1102	40000	5.70			
0.26	3470	5240	26200	0.80	GK GKF GKA GKAF	87 GRF57 87 GRF57 87 GRF57 87 GRF57	Y..63M$_1$-4 AM63 AD2
0.30	2890	4562	27000	0.95			
0.34	2680	4037	27300	1.00			
0.38	2390	3609	27600	1.15			
0.44	2060	3107	28000	1.30			
0.51	1730	2728	28300	1.55			
0.58	1530	2371	28400	1.75			
0.66	1430	2088	28500	1.90			
0.74	1270	1854	28600	2.10			
0.83	1130	1657	28700	2.40			
0.97	960	1415	28800	2.80			
1.10	830	1229	28900	3.20			
1.30	720	1078	28900	3.70			
1.40	610	951	29000	4.40			
1.60	520	837	29000	5.20			
1.90	450	726	29000	5.90			

n_2 [1/min]	M_2 [Nm]	i	Fr [N]	K	Frame size		Input Configuration
P_1=0.12kw							
0.51	1840	2717	11500	0.85	GK GKF GKA GKAF	77 GRF37 77 GRF37 77 GRF37 77 GRF37	Y..63M$_1$-4 AM63 AD2
0.58	1530	2370	15500	1.00			
0.67	1430	2050	16100	1.10			
0.78	1220	1772	17300	1.25			
0.91	1040	1514	18100	1.50			
0.99	960	1388	18500	1.60			
1.10	840	1218	18900	1.85			
1.30	735	1053	19200	2.10			
1.50	645	924	19400	2.40			
1.70	570	815	19600	2.70			
2.00	445	709	19800	3.50			
2.20	390	622	19900	3.90			
1.00	960	1351	6940	0.85	GK GKF GKA GKAF	67 GRF37 67 GRF37 67 GRF37 67 GRF37	Y..63M$_1$-4 AM63 AD2
1.20	820	1171	10300	1.00			
1.30	720	1034	11100	1.15			
1.50	600	903	11900	1.35			
1.70	570	793	12100	1.45			
2.00	455	697	12600	1.80			
2.20	400	613	12800	2.00			
2.60	350	542	13000	2.30	GK GKF GKA GKAF	67 GRF37 67 GRF37 67 GRF37 67 GRF37	Y..63M$_1$-4 AM63 AD2
2.90	325	471	13000	2.50			
3.30	270	420	13000	3.00			
3.80	245	361	13000	3.30			
4.30	215	323	13000	3.80			
5.00	181	279	13000	4.50			
5.60	159	246	13000	5.20			
6.40	139	217	13000	5.90			
1.50	605	906	7580	1.00	GK GKF GKA GKAF	57 GRF37 57 GRF37 57 GRF37 57 GRF37	Y..63M$_1$-4 AM63 AD2
1.70	545	806	8060	1.10			
2.00	455	699	8620	1.30			
2.20	400	615	8870	1.50			
2.50	350	544	9080	1.70			
2.90	320	473	9190	1.85			
3.30	270	421	9390	2.20			
3.80	245	362	9470	2.40			
4.30	215	319	9570	2.80			
4.90	181	280	9690	3.30			
5.60	160	246	9760	3.80			
6.40	141	215	9810	4.30			
7.20	126	192	9850	4.80			
2.50	380	552	6170	1.05	GK GKF GKA GKAF	47 GRF37 47 GRF37 47 GRF37 47 GRF37	Y..63M$_1$-4 AM63 AD2
2.80	320	495	6840	1.25			
3.20	285	426	7160	1.40			
3.70	240	375	7510	1.65			
4.20	225	327	7620	1.75			
4.80	198	289	7780	2.00			
4.00	240	346	3540	0.80	GK GKF GKA GKAF	37 GRF17 37 GRF17 37 GRF17 37 GRF17	Y..63M$_1$-4 AM63 -
4.50	205	304	5570	0.95			
5.20	189	267	5760	1.05			
5.90	163	234	6010	1.20			
6.70	142	205	6180	1.40			
7.60	124	181	6300	1.60			
8.60	109	160	6400	1.85			

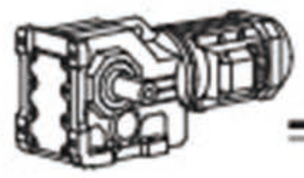

n_2 [1/min]	M_2 [Nm]	i	Fr [N]	K	Frame size	Input Configuration
P_1=0.12kw						
10.0	91	136	6490	2.20	GK 37 GRF17 GKF 37 GRF17 GKA 37 GRF17 GKAF 37 GRF17	Y..63M$_1$-4 AM63 -
9.50 11.0 13.0 13.0 15.0	120 103 90 85 75	145.14 123.85 108.29 102.88 90.26	9870 9920 9950 9960 9990	5.00 5.80 6.70 7.00 8.00	GK 57 GKF 57 GKA 57 GKAF 57	Y..63M$_1$-4 AM63 AD2
10.0 11.0	110 101	131.87 121.48	8140 8170	3.60 4.00	GK 47 GKF 47 GKA 47 GKAF 47	Y..63M$_1$-4 AM63 AD2
13.0 14.0 16.0 19.0 20.0 24.0 28.0 31.0 36.0 39.0	88 81 70 60 56 49 41 37 32 30	106.38 97.81 83.69 72.54 67.8 58.6 49.79 44.46 37.97 35.57	6500 6530 6570 6600 6610 6430 6130 5930 5660 5550	2.30 2.50 2.90 3.30 3.60 4.10 4.80 5.40 6.40 6.80	GK 37 GKF 37 GKA 37 GKAF 37	Y..63M$_1$-4 AM63 AD1
46.0 48.0 55.0 59.0 68.0 80.0 90.0 105 114	25 24 21 19 17 14 13 11 10	29.96 28.83 24.99 23.36 20.19 17.15 15.31 13.08 12.14	5270 5200 4980 4880 4660 4430 4280 4070 3970	8.00 8.40 9.60 10.0 11.0 13.0 14.0 15.0 16.0	GK 37 GKF 37 GKA 37 GKAF 37	Y..63M$_1$-4 AM63 AD2
P_1=0.18kw						
0.09 0.11 0.12 0.13 0.16 0.18 0.20 0.23 0.26 0.30 0.34 0.40	15700 13100 11500 10300 8870 7880 6910 5880 5210 4480 3900 3240	14975 12440 10915 9819 8443 7482 6565 5804 5027 4423 3889 3311	74400 79100 80000 80500 81100 81500 81800 82100 82300 82400 82500 82600	0.80 1.00 1.15 1.25 1.45 1.65 1.90 2.20 2.50 2.90 3.30 4.00	GK 127 GRF77 GKF 127 GRF77 GKA 127 GRF77 GKAF127 GRF77	Y..63M$_2$-4 AM63 AD2
0.16 0.18 0.21 0.23 0.26 0.30	8770 7660 6410 5690 5160 4580	8328 7270 6184 5662 5138 4359	65000 65000 65000 65000 65000 65000	0.90 1.05 1.25 1.40 1.55 1.75	GK 107 GRF77 GKF 107 GRF77 GKA 107 GRF77 GKAF107 GRF77	Y..63M$_2$-4 AM63 AD2

n_2 [1/min]	M_2 [Nm]	i	Fr [N]	K	Frame size	Input Configuration
P_1=0.18kw						
0.35 0.39 0.44 0.51 0.58	4000 3400 3080 2690 2310	3810 3358 2977 2599 2286	65000 65000 65000 65000 65000	2.00 2.40 2.60 3.00 3.40	GK 107 GRF77 GKF 107 GRF77 GKA 107 GRF77 GKAF107 GRF77	Y..63M$_2$-4 AM63 AD2
0.28 0.32 0.37 0.42 0.48 0.55 0.62 0.71 0.81 0.92 1.00 1.20 1.40 1.50	5050 4530 3940 3450 2980 2720 2360 2090 1760 1520 1420 1240 1080 970	4669 4082 3583 3108 2757 2419 2123 1856 1625 1430 1261 1102 957 855	39800 40000 40000 40000 40000 40000 40000 40000 40000 40000 40000 40000 40000 40000	0.85 0.95 1.10 1.25 1.45 1.60 1.80 2.10 2.40 2.80 3.00 3.50 4.00 4.40	GK 97 GRF57 GKF 97 GRF57 GKA 97 GRF57 GKAF 97 GRF57	Y..63M$_2$-4 AM63 AD2
1.80 2.00	770 690	743 652	40000 40000	5.60 6.20	GK 97 GRF57 GKF 97 GRF57 GKA 97 GRF57 GKAF 97 GRF57	Y..63M$_2$-4 AM63 AD3
0.42 0.48 0.56 0.63 0.71	3430 2920 2560 2350 2080	3107 2728 2371 2088 1854	26200 27000 27400 27700 28000	0.80 0.90 1.05 1.15 1.30	GK 87 GRF57 GKF 87 GRF57 GKA 87 GRF57 GKAF 87 GRF57	Y..63M$_2$-4 AM63 AD2
0.80 0.93 1.10 1.20 1.40 1.60 1.80	1860 1590 1380 1200 1030 890 775	1657 1415 1229 1078 951 837 726	28200 28400 28600 28700 28800 28800 28900	1.45 1.70 1.95 2.20 2.60 3.00 3.50	GK 87 GRF57 GKF 87 GRF57 GKA 87 GRF57 GKAF 87 GRF57	Y..63M$_2$-4 AM63 AD2
0.87 0.95 1.10 1.20	1710 1570 1380 1200	1514 1388 1218 1053	14100 15200 16500 17400	0.90 1.00 1.10 1.30	GK 77 GRF37 GKF 77 GRF37 GKA 77 GRF37 GKAF 77 GRF37	Y..63M$_2$-4 AM63 AD2
1.40 1.60 1.90 2.10 2.40 2.70 3.10 3.60	1050 930 760 665 600 525 465 410	924 815 709 622 552 485 428 367	18100 18600 19100 19300 19500 19600 19800 19800	1.45 1.65 2.00 2.30 2.60 2.90 3.30 3.80	GK 77 GRF37 GKF 77 GRF37 GKA 77 GRF37 GKAF 77 GRF37	Y..63M$_2$-4 AM63 AD2
1.70 1.90 2.20 2.40 2.80 3.20	920 760 670 590 535 455	793 697 613 542 471 420	9240 10800 11500 12000 12200 12600	0.90 1.05 1.20 1.40 1.50 1.80	GK 67 GRF37 GKF 67 GRF37 GKA 67 GRF37 GKAF 67 GRF37	Y..63M$_2$-4 AM63 AD2

n_2 [1/min]	M_2 [Nm]	i	Fr [N]	K	Frame size	Input Configuration
P_1=0.18kw						
3.60 4.10 4.70	405 360 300	361 323 279	12800 12900 13000	2.00 2.30 2.70	GK 67 GRF37 GKF 67 GRF37 GKA 67 GRF37 GKAF 67 GRF37	Y..63M_2-4 AM63 AD2
2.40 2.80 3.10 3.60 4.10 4.70 5.40	590 535 455 405 360 300 265	544 473 421 362 319 280 246	7690 8150 8620 8840 9050 9270 9400	1.00 1.10 1.30 1.45 1.65 1.95 2.20	GK 57 GRF37 GKF 57 GRF37 GKA 57 GRF37 GKAF 57 GRF37	Y..63M_2-4 AM63 AD2
6.10 6.90 7.90	235 210 182	215 192 166	9510 9600 9690	2.50 2.80 3.30	GK 57 GRF37 GKF 57 GRF37 GKA 57 GRF37 GKAF 57 GRF37	Y..63M_2-4 AM63 AD2
3.50 4.00 4.60 5.20 5.90 6.70 7.70 8.60 10.0	405 365 325 275 250 215 188 168 147	375 327 289 256 225 198 171 153 131	5600 6320 6800 7240 7450 7680 7840 7930 8020	1.00 1.10 1.20 1.45 1.60 1.85 2.10 2.40 2.70	GK 47 GRF37 GKF 47 GRF37 GKA 47 GRF37 GKAF 47 GRF37	Y..63M_2-4 AM63 AD2
6.40 7.30 8.20 9.70 10.0	230 200 180 151 145	205 181 160 136 127	4860 5590 5860 6110 6160	0.85 1.00 1.10 1.35 1.40	GK 37 GRF17 GKF 37 GRF17 GKA 37 GRF17 GKAF 37 GRF17	Y..63M_2-4 AM63 -
6.00 7.00 8.00 8.50	285 240 210 200	144.79 123.54 108.03 102.62	13000 13000 13000 13000	2.90 3.40 3.80 4.00	GK 67 GKF 67 GKA 67 GKAF 67	Y..71M_1-6 AM71 AD2
9.10 11.0 12.0	188 161 141	144.79 123.54 108.03	13000 13000 13000	4.40 5.10 5.80	GK 67 GKF 67 GKA 67 GKAF 67	Y..63M_2-4 AM63 AD2
6.00 7.00 8.00 8.50 9.60	285 240 210 200 178	145.14 123.85 108.29 102.88 90.26	9340 9480 9590 9620 9700	2.10 2.40 2.80 3.00 3.40	GK 57 GKF 57 GKA 57 GKAF 57	Y..71M_1-6 AM71 AD2
9.10 11.0 12.0 13.0	189 161 141 134	145.14 123.85 108.29 102.88	9670 9750 9810 9830	3.20 3.70 4.30 4.50	GK 57 GKF 57 GKA 57 GKAF 57	Y..63M_2-4 AM63 AD2
15.0 17.0	118 100	90.26 76.56	9880 9920	5.10 6.00	GK 57 GKF 57 GKA 57 GKAF 57	Y..63M_2-4 AM63 AD2

n_2 [1/min]	M_2 [Nm]	i	Fr [N]	K	Frame size	Input Configuration
P_1=0.18kw						
6.60 7.20 8.30 9.60 10.0	260 240 205 180 168	131.87 121.48 104.37 90.86 85.12	7380 7530 7740 7880 7930	1.55 1.65 1.95 2.20 2.40	GK 47 GKF 47 GKA 47 GKAF 47	Y..71M_1-6 AM71 AD2
10.0 11.0 13.0	172 158 136	131.87 121.48 104.37	7910 7970 8060	2.30 2.50 2.90	GK 47 GKF 47 GKA 47 GKAF 47	Y..63M_2-4 AM63 AD2
15.0 16.0	118 111	90.86 85.12	8120 8140	3.40 3.60	GK 47 GKF 47 GKA 47 GKAF 47	Y..63M_2-4 AM63 AD2
8.20 8.90 10.0 12.0	210 193 165 143	106.38 97.81 83.69 72.54	5520 5710 5990 6170	0.95 1.05 1.20 1.40	GK 37 GKF 37 GKA 37 GKAF 37	Y..71M_1-6 AM71 AD1
12.0 14.0 16.0 18.0 19.0 23.0 27.0 30.0 35.0 37.0	138 127 109 94 88 76 65 58 49 46	106.38 97.81 83.69 72.54 67.8 58.6 49.79 44.46 37.97 35.57	6210 6280 6400 6470 6500 6280 6010 5830 5580 5480	1.45 1.55 1.85 2.10 2.30 2.60 3.10 3.40 4.00 4.30	GK 37 GKF 37 GKA 37 GKAF 37	Y..63M_2-4 AM63 AD1
44.0 46.0 53.0 57.0 65.0 77.0 86.0	39 38 32 30 26 22 20	29.96 28.83 24.99 23.36 20.19 17.15 15.31	5220 5160 4950 4850 4650 4430 4280	5.10 5.30 6.20 6.40 7.00 8.10 8.80	GK 37 GKF 37 GKA 37 GKAF 37	Y..63M_2-4 AM63 AD2
101 109 126 148 166	17 16 14 12 10	13.08 12.14 10.49 8.91 7.96	4080 3980 3810 3620 3490	9.70 10.0 12.0 14.0 15.0	GK 37 GKF 37 GKA 37 GKAF 37	Y..63M_2-4 AM63 AD2
P_1=0.25kw						
0.13 0.15 0.17 0.20 0.22 0.26 0.29	15100 13000 11500 10100 8750 7690 6660	9819 8443 7482 6565 5804 5027 4423	75600 79200 79900 80600 81200 81600 81900	0.85 1.00 1.10 1.30 1.50 1.70 1.95	GK 127 GRF77 GKF 127 GRF77 GKA 127 GRF77 GKAF127 GRF77	Y..71M_1-4 AM71 AD2
0.33 0.39	5820 4870	3889 3311	82100 82300	2.20 2.70	GK 127 GRF77 GKF 127 GRF77 GKA 127 GRF77 GKAF127 GRF77	Y..71M_1-4 AM71 AD2

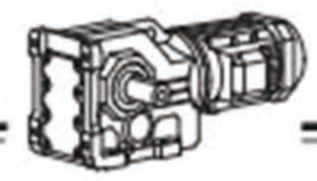

n_2 [1/min]	M_2 [Nm]	i	Fr [N]	K	Frame size	Input Configuration
P_1=0.25kw						
0.21	9460	6184	65000	0.85	GK 107 GRF77 GKF 107 GRF77 GKA 107 GRF77 GKAF107 GRF77	Y..71M_1-4 AM71 AD2
0.23	8480	5662	65000	0.95		
0.25	7690	5138	65000	1.05		
0.30	6730	4359	65000	1.20		
0.34	5880	3810	65000	1.35	GK 107 GRF77 GKF 107 GRF77 GKA 107 GRF77 GKAF107 GRF77	Y..71M_1-4 AM71 AD2
0.39	5060	3358	65000	1.60		
0.44	4550	2977	65000	1.75		
0.50	3970	2599	65000	2.00	GK 107 GRF77 GKF 107 GRF77 GKA 107 GRF77 GKAF107 GRF77	Y..71M_1-4 AM71 AD2
0.57	3440	2286	65000	2.30		
0.67	2920	1939	65000	2.70		
0.76	2670	1713	65000	3.00	GK 107 GRF77 GKF 107 GRF77 GKA 107 GRF77 GKAF107 GRF77	Y..71M_1-4 AM71 AD3
0.84	2430	1554	65000	3.30		
0.97	2080	1336	65000	3.80		
0.42	4980	3108	39900	0.85	GK 97 GRF57 GKF 97 GRF57 GKA 97 GRF57 GKAF 97 GRF57	Y..71M_1-4 AM71 AD2
0.47	4350	2757	40000	1.00		
0.54	3920	2419	40000	1.10		
0.61	3420	2123	40000	1.25		
0.70	3010	1856	40000	1.40		
0.80	2570	1625	40000	1.65	GK 97 GRF57 GKF 97 GRF57 GKA 97 GRF57 GKAF 97 GRF57	Y..71M_1-4 AM71 AD2
0.91	2240	1430	40000	1.90		
1.00	2050	1261	40000	2.10	GK 97 GRF57 GKF 97 GRF57 GKA 97 GRF57 GKAF 97 GRF57	Y..71M_1-4 AM71 AD2
1.20	1790	1102	40000	2.40		
1.40	1560	957	40000	2.70		
1.50	1400	855	40000	3.10		
0.62	3390	2088	26300	0.80	GK 87 GRF57 GKF 87 GRF57 GKA 87 GRF57 GKAF 87 GRF57	Y..71M_1-4 AM71 AD2
0.70	3010	1854	26900	0.90		
0.78	2690	1657	27300	1.00		
0.92	2290	1415	27800	1.15		
1.10	1990	1229	28100	1.35		
1.20	1730	1078	28300	1.55		
1.40	1500	951	28500	1.80		
1.60	1310	837	28600	2.10		
1.80	1130	726	28700	2.40		
2.00	1010	638	28800	2.70	GK 87 GRF57 GKF 87 GRF57 GKA 87 GRF57 GKAF 87 GRF57	Y..71M_1-4 AM71 AD3
1.20	1720	1053	14000	0.90	GK 77 GRF37 GKF 77 GRF37 GKA 77 GRF37 GKAF 77 GRF37	Y..71M_1-4 AM71 AD2
1.40	1510	924	15600	1.00		
1.60	1330	815	16700	1.15		
1.80	1110	709	17800	1.40		
2.10	970	622	18400	1.60		
2.40	870	552	18700	1.75		
2.70	765	485	19100	2.00		
3.00	675	428	19300	2.30		

n_2 [1/min]	M_2 [Nm]	i	Fr [N]	K	Frame size	Input Configuration
P_1=0.25kw						
3.50	590	367	19500	2.60	GK 77 GRF37 GKF 77 GRF37 GKA 77 GRF37 GKAF 77 GRF37	Y..71M_1-4 AM71 AD2
4.00	525	328	19600	2.90		
4.50	465	290	19700	3.30		
5.20	400	252	19900	3.80		
5.90	350	221	19900	4.40		
6.70	310	195	20000	5.00		
7.40	270	175	20000	5.60		
2.10	970	613	5680	0.85	GK 67 GRF37 GKF 67 GRF37 GKA 67 GRF37 GKAF 67 GRF37	Y..71M_1-4 AM71 AD2
2.40	860	542	9920	0.95		
2.80	775	471	10700	1.05		
3.10	665	420	11500	1.25		
3.60	590	361	11900	1.4		
4.00	520	323	12300	1.55		
4.70	440	279	12600	1.85		
5.30	390	246	12800	2.10		
6.00	345	217	13000	2.40		
3.10	665	421	4200	0.90	GK 57 GRF37 GKF 57 GRF37 GKA 57 GRF37 GKAF 57 GRF37	Y..71M_1-4 AM71 AD2
3.60	590	362	7690	1.00		
4.10	520	319	8260	1.15		
4.60	440	280	8680	1.35		
5.30	390	246	8920	1.55		
6.00	345	215	9110	1.75		
6.80	305	192	9260	1.95		
7.80	265	166	9410	2.30		
9.00	230	145	9530	2.60		
10.0	210	129	9600	2.80		
12.0	178	111	9700	3.40		
13.0	156	97	9770	3.80		
4.70	510	192.18	19700	2.80	GK 77 GKF 77 GKA 77 GKAF 77	Y..71M_2-6 AM71 AD2
5.00	475	179.37	19700	3.00		
5.80	410	154.02	19800	3.80		
6.60	360	135.28	19900	4.30		
6.20	385	144.79	12900	2.10	GK 67 GKF 67 GKA 67 GKAF 67	Y..71M_2-6 AM71 AD2
7.20	325	123.54	13000	2.50		
8.30	285	108.03	13000	2.80		
8.70	270	102.62	13000	3.00		
9.00	265	144.79	13000	3.10	GK 67 GKF 67 GKA 67 GKAF 67	Y..71M_1-4 AM71 AD2
11.0	225	123.54	13000	3.60		
12.0	198	108.03	13000	4.10		
13.0	188	102.62	13000	4.40		
6.20	385	145.14	8940	1.55	GK 57 GKF 57 GKA 57 GKAF 57	Y..71M_2-6 AM71 AD2
7.20	330	123.85	9170	1.80		
8.30	285	108.29	9330	2.10		
8.70	270	102.88	9380	2.20		
9.90	240	90.26	9500	2.50		
12.0	200	76.56	9620	2.90		
9.00	265	145.14	9410	2.20	GK 57 GKF 57 GKA 57 GKAF 57	Y..71M_1-4 AM71 AD2
10.0	225	123.85	9540	2.60		
12.0	199	108.29	9640	3.00		
13.0	189	102.88	9670	3.20		
14.0	166	90.26	9740	3.60		
17.0	141	76.56	9810	4.30		

n_2 [1/min]	M_2 [Nm]	i	Fr [N]	K	Frame size	Input Configuration
P_1=0.25kw						
6.80	350	131.87	6540	1.15	GK 47 GKF 47 GKA 47 GKAF 47	Y..71M_2-6 AM71 AD2
7.40	320	121.48	6830	1.25		
8.60	275	104.37	7240	1.45		
9.80	240	90.86	7510	1.65		
11.0	225	85.12	7610	1.75		
9.90	240	131.87	7510	1.65	GK 47 GKF 47 GKA 47 GKAF 47	Y..71M_1-4 AM71 AD2
11.0	220	121.48	7640	1.80		
12.0	192	104.37	7820	2.10		
14.0	167	90.86	7930	2.40		
15.0	156	85.12	7980	2.60		
11.0	220	83.69	5350	0.90	GK 37 GKF 37 GKA 37 GKAF 37	Y..71M_2-6 AM71 AD1
12.0	194	72.54	5710	1.05		
13.0	181	67.8	5840	1.10		
15.0	156	58.6	6070	1.30		
18.0	133	49.79	6250	1.50		
12.0	195	106.38	5690	1.00	GK 37 GKF 37 GKA 37 GKAF 37	Y..71M_1-4 AM71 AD1
13.0	180	97.81	5860	1.10		
16.0	154	83.69	6090	1.30		
18.0	133	72.54	6240	1.50		
19.0	124	67.8	6220	1.60		
22.0	108	58.6	6030	1.85		
26.0	91	49.79	5810	2.20		
29.0	82	44.46	5650	2.40		
34.0	70	37.97	5430	2.90	GK 37 GKF 37 GKA 37 GKAF 37	Y..71M_1-4 AM71 AD1
37.0	65	35.57	5340	3.10		
43.0	55	29.96	5100	3.60	GK 37 GKF 37 GKA 37 GKAF 37	Y..71M_1-4 AM71 AD2
45.0	53	28.83	5050	3.80		
52.0	46	24.99	4860	4.40		
56.0	43	23.36	4770	4.60		
64.0	37	20.19	4580	5.00		
76.0	32	17.15	4370	5.70		
85.0	28	15.31	4220	6.20		
99.0	24	13.08	4030	6.90		
107	22	12.14	3940	7.20		
124	19	10.49	3780	8.30		
146	16	8.91	3590	9.80		
163	15	7.96	3470	11.0		
191	12	6.8	3300	12.0	GK 37 GKF 37 GKA 37 GKAF 37	Y..71M_1-4 AM71 AD2
204	12	6.37	3240	12.0		
P_1=0.37kw						
0.18	16500	7482	72700	0.80	GK 127 GRF77 GKF 127 GRF77 GKA 127 GRF77 GKAF127 GRF77	Y..71M_2-4 AM71 AD2
0.21	14500	6565	76900	0.90		
0.24	12600	5804	79400	1.05		
0.27	11000	5027	80200	1.20		
0.31	9610	4423	80800	1.35		
0.35	8410	3889	81300	1.55		
0.42	7080	3311	81800	1.85		

n_2 [1/min]	M_2 [Nm]	i	Fr [N]	K	Frame size	Input Configuration
P_1=0.37kw						
0.72	4280	1926	82400	3.00	GK 127 GRF77 GKF 127 GRF77 GKA 127 GRF77 GKAF127 GRF77	Y..71M_2-4 AM71 AD3
0.79	3900	1757	82500	3.30		
0.90	3390	1541	82600	3.80		
0.36	8420	3810	65000	0.95	GK 107 GRF77 GKF 107 GRF77 GKA 107 GRF77 GKAF107 GRF77	Y..71M_2-4 AM71 AD2
0.41	7290	3358	65000	1.10		
0.46	6530	2977	65000	1.20		
0.53	5700	2599	65000	1.40		
0.60	4960	2286	65000	1.60		
0.71	4210	1939	65000	1.90		
0.81	3830	1713	65000	2.10	GK 107 GRF77 GKF 107 GRF77 GKA 107 GRF77 GKAF107 GRF77	Y..71M_2-4 AM71 AD3
0.89	3470	1554	65000	2.30		
1.00	2990	1336	65000	2.70		
1.20	2600	1166	65000	3.10		
0.65	4850	2123	40000	0.90	GK 97 GRF57 GKF 97 GRF57 GKA 97 GRF57 GKAF 97 GRF57	Y..71M_2-4 AM71 AD2
0.74	4270	1856	40000	1.00		
0.85	3670	1625	40000	1.15		
0.96	3200	1430	40000	1.35		
1.10	2900	1261	40000	1.50		
1.20	2530	1102	40000	1.70		
1.40	2220	957	40000	1.95		
1.60	1980	855	40000	2.20		
2.40	1310	573	40000	3.30		
1.90	1640	743	40000	2.60	GK 97 GRF57 GKF 97 GRF57 GKA 97 GRF57 GKAF 97 GRF57	Y..71M_2-4 AM71 AD3
2.10	1450	652	40000	3.00		
1.90	1640	743	40000	2.60	GK 97 GRF57 GKF 97 GRF57 GKA 97 GRF57 GKAF 97 GRF57	Y..71M_2-4 AM71 AD3
2.10	1450	652	40000	3.00		
0.97	3250	1415	26500	0.85	GK 87 GRF57 GKF 87 GRF57 GKA 87 GRF57 GKAF 87 GRF57	Y..71M_2-4 AM71 AD2
1.10	2820	1229	27100	0.95		
1.30	2460	1078	27600	1.10		
1.40	2140	951	27900	1.25		
1.60	1870	837	28200	1.45		
1.90	1620	726	28400	1.65		
2.20	1440	638	28500	1.85	GK 87 GRF57 GKF 87 GRF57 GKA 87 GRF57 GKAF 87 GRF57	Y..71M_2-4 AM71 AD3
2.50	1250	562	28600	2.20		
2.90	1050	474	28800	2.60		
3.20	950	426	28800	2.80		
3.70	830	373	28900	3.20		
1.70	1880	815	7450	0.80	GK 77 GRF37 GKF 77 GRF37 GKA 77 GRF37 GKAF 77 GRF37	Y..71M_2-4 AM71 AD2
2.00	1590	709	15100	0.95		
2.20	1390	622	16400	1.10		
2.50	1250	552	17200	1.25		
2.80	1090	485	17900	1.40		
3.20	960	428	18400	1.60		
3.80	840	367	18900	1.85		
4.20	745	328	19100	2.10		
4.80	665	290	19400	2.30		
5.50	570	252	19600	2.70		

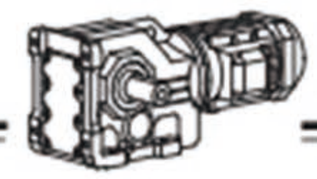

n_2 [1/min]	M_2 [Nm]	i	Fr [N]	K	Frame size		Input Configuration
P_1=0.37kw							
6.20	500	221	19700	3.10	GK	77 GRF37	Y..71M$_2$-4 AM71 AD2
7.10	440	195	19800	3.50	GKF	77 GRF37	
7.90	390	175	19900	4.00	GKA	77 GRF37	
9.00	345	154	19900	4.50	GKAF	77 GRF37	
3.30	940	420	8130	0.85	GK	67 GRF37	Y..71M$_2$-4 AM71 AD2
3.80	830	361	10200	1.00	GKF	67 GRF37	
4.30	740	323	10900	1.10	GKA	67 GRF37	
5.00	630	279	11700	1.30	GKAF	67 GRF37	
5.60	555	246	12100	1.50			
7.20	430	191	12700	1.90			
8.30	370	166	12900	2.20			
9.60	325	144	13000	2.50			
11.0	275	122	13000	2.90			
4.90	630	280	7350	0.95	GK	57 GRF37	Y..71M$_2$-4 AM71 AD2
5.60	555	246	7980	1.10	GKF	57 GRF37	
6.40	490	215	8460	1.20	GKA	57 GRF37	
7.20	435	192	8720	1.40	GKAF	57 GRF37	
8.30	375	166	8980	1.60			
11.0	295	129	9290	2.00			
12.0	250	111	9460	2.40			
14.0	220	97	9560	2.70			
4.60	770	197.37	28900	3.50	GK	87	Y..80M$_1$-6 AM80 AD2
5.20	680	174.19	28900	4.00	GKF	87	
					GKA	87	
					GKAF	87	
5.90	600	154.02	19500	2.60	GK	77	Y..80M$_1$-6 AM80 AD2
6.70	525	135.28	19600	2.90	GKF	77	
7.00	500	128.52	19700	3.10	GKA	77	
8.00	440	113.56	19800	3.50	GKAF	77	
7.20	490	192.18	19700	3.00	GK	77	Y..71M$_2$-4 AM71 AD2
7.70	455	179.37	19800	3.20	GKF	77	
9.00	390	154.02	19900	3.90	GKA	77	
					GKAF	77	
7.30	480	123.54	12500	1.70	GK	67	Y..80M$_1$-6 AM80 AD2
8.40	420	108.03	12700	1.95	GKF	67	
8.80	400	102.62	12800	2.00	GKA	67	
10.0	350	90.04	13000	2.30	GKAF	67	
9.50	370	144.79	12900	2.20	GK	67	Y..71M$_2$-4 AM71 AD2
11.0	315	123.54	13000	2.60	GKF	67	
13.0	275	108.03	13000	3.00	GKA	67	
15.0	230	90.04	13000	3.60	GKAF	67	
18.0	196	76.37	13000	4.20			
7.30	480	123.85	8500	1.25	GK	57	Y..80M$_1$-6 AM80 AD2
8.40	420	108.29	8780	1.40	GKF	57	
8.80	400	102.88	8880	1.50	GKA	57	
10.0	350	90.26	9080	1.70	GKAF	57	
12.0	295	76.56	9290	2.00			
13.0	265	69.12	9400	2.20			

n_2 [1/min]	M_2 [Nm]	i	Fr [N]	K	Frame size		Input Configuration
P_1=0.37kw							
9.50	370	145.14	9000	1.60	GK	57	Y..71M$_2$-4 AM71 AD2
11.0	315	123.85	9220	1.90	GKF	57	
13.0	275	108.29	9370	2.20	GKA	57	
13.0	260	102.88	9420	2.30	GKAF	57	
18.0	196	76.56	9640	3.10			
20.0	177	69.12	9700	3.40			
8.70	405	104.37	5720	1.00	GK	47	Y..80M$_1$-6 AM80 AD2
10.0	350	90.86	6500	1.15	GKF	47	
11.0	330	85.12	6750	1.20	GKA	47	
12.0	290	75.20	7120	1.35	GKAF	47	
10.0	335	131.87	6690	1.20	GK	47	Y..71M$_2$-4 AM71 AD2
11.0	310	121.48	6960	1.30	GKF	47	
13.0	265	104.37	7330	1.50	GKA	47	
15.0	230	90.86	7580	1.70	GKAF	47	
16.0	215	85.12	7670	1.85			
18.0	192	75.20	7810	2.10			
20.0	179	69.84	7880	2.20			
22.0	162	63.30	7960	2.50			
14.0	250	97.81	2520	0.80	GK	37	Y..71M$_2$-4 AM71 AD1
16.0	210	83.69	5470	0.95	GKF	37	
19.0	186	72.54	5690	1.10	GKA	37	
20.0	174	67.8	5630	1.15	GKAF	37	
24.0	150	58.6	5500	1.35			
28.0	128	49.79	5350	1.55			
31.0	114	44.46	5230	1.75			
36.0	97	37.97	5060	2.10			
39.0	91	35.57	4990	2.20			
46.0	77	29.96	4800	2.60	GK	37	Y..71M$_2$-4 AM71 AD2
48.0	74	28.83	4750	2.70	GKF	37	
55.0	64	24.99	4590	3.10	GKA	37	
59.0	60	23.36	4510	3.30	GKAF	37	
68.0	52	20.19	4350	3.60			
80.0	44	17.15	4160	4.10			
90.0	39	15.31	4040	4.50			
105	34	13.08	3860	4.90			
114	31	12.14	3780	5.10			
132	27	10.49	3630	6.00			
155	23	8.91	3460	7.00			
173	20	7.96	3350	7.60			
203	17	6.8	3190	8.60			
217	16	6.37	3130	8.90	GK	37	Y..71M$_2$-4 AM71 AD2
257	14	5.36	2970	10.0	GKF	37	
					GKA	37	
					GKAF	37	
P_1=0.55kw							
0.08	54100	16978	190000	0.90	GK	187 GRF97	Y..80M$_1$-4 AM80 AD3
0.10	45400	14272	190000	1.10	GKH	187 GRF97	
0.11	41300	13116	190000	1.20			
0.12	36000	11647	190000	1.40			
0.19	23300	7343	190000	2.10			

n_2 [1/min]	M_2 [Nm]	i	Fr [N]	K	Frame size	Input Configuration
P_1=0.55kw						
0.12	36900	11573	150000	0.85	GK 167 GRF97 GKH 167 GRF97	Y..80M_1-4 AM80 AD3
0.13	32700	10264	150000	1.00		
0.16	27400	8628	150000	1.15		
0.21	20800	6562	150000	1.55		
0.26	16500	5355	150000	1.95		
0.34	12800	4079	150000	2.50		
0.20	21900	6881	110000	0.80	GK 157 GRF97 GKF 157 GRF97 GKA 157 GRF97 GKAF157 GRF97	Y..80M_1-4 AM80 AD3
0.23	18800	5931	111700	0.95		
0.35	12600	3979	114500	1.40		
0.45	9710	3051	115400	1.85		
0.31	14600	4423	76600	0.90	GK 127 GRF77 GKF 127 GRF77 GKA 127 GRF77 GKAF127 GRF77	Y..80M_1-4 AM80 AD2
0.35	12800	3889	79200	1.00		
0.42	10800	3311	80300	1.20		
0.46	9840	3009	80700	1.30		
0.53	8450	2607	81300	1.55		
0.72	6520	1926	81900	2.00	GK 127 GRF77 GKF 127 GRF77 GKA 127 GRF77 GKAF127 GRF77	Y..80M_1-4 AM80 AD3
0.79	5940	1757	82100	2.20		
0.90	5180	1541	82300	2.50		
1.00	4540	1342	82400	2.90		
1.20	3950	1177	82500	3.30		
1.40	3460	1025	82600	3.80		
0.46	9950	2977	65000	0.80	GK 107 GRF77 GKF 107 GRF77 GKA 107 GRF77 GKAF107 GRF77	Y..80M_1-4 AM80 AD2
0.53	8690	2599	65000	0.90		
0.60	7590	2286	65000	1.05		
0.71	6440	1939	65000	1.25		
0.81	5820	1713	65000	1.35	GK 107 GRF77 GKF 107 GRF77 GKA 107 GRF77 GKAF107 GRF77	Y..80M_1-4 AM80 AD3
0.89	5280	1554	65000	1.50		
1.00	4540	1336	65000	1.75		
1.20	3960	1166	65000	2.00		
1.30	3400	1030	65000	2.40		
1.50	2960	904	65000	2.70		
1.70	2680	793	65000	3.00		
2.00	2330	696	65000	3.40		
2.20	2010	615	65000	4.00		
0.96	4860	1430	40000	0.90	GK 97 GRF57 GKF 97 GRF57 GKA 97 GRF57 GKAF 97 GRF57	Y..80M_1-4 AM80 AD2
1.10	4360	1261	40000	1.00		
1.20	3810	1102	40000	1.15		
1.40	3340	957	40000	1.30		
1.60	2990	855	40000	1.45		
2.40	1980	573	40000	2.20		
1.90	2500	743	40000	1.70	GK 97 GRF57 GKF 97 GRF57 GKA 97 GRF57 GKAF 97 GRF57	Y..80M_1-4 AM80 AD3
2.10	2210	652	40000	1.95		
2.70	1690	504	40000	2.50		
3.20	1450	437	40000	3.00		
3.60	1300	382	40000	3.30		
4.50	1040	305	40000	4.10		
1.40	3250	951	26500	0.85	GK 87 GRF57 GKF 87 GRF57 GKA 87 GRF57 GKAF 87 GRF57	Y..80M_1-4 AM80 AD2
1.60	2840	837	27100	0.95		
1.90	2470	726	27600	1.10		

n_2 [1/min]	M_2 [Nm]	i	Fr [N]	K	Frame size	Input Configuration
P_1=0.55kw						
2.20	2180	638	27900	1.25	GK 87 GRF57 GKF 87 GRF57 GKA 87 GRF57 GKAF 87 GRF57	Y..80M_1-4 AM80 AD3
2.50	1910	562	28100	1.40		
2.90	1610	474	28400	1.70		
3.20	1440	426	28500	1.85		
3.70	1270	373	28600	2.10		
4.20	1100	330	28700	2.40		
4.70	990	294	28800	2.70		
5.50	860	250	28900	3.10		
5.80	810	236	28900	3.30		
6.90	685	201	28900	3.90		
2.80	1660	485	14600	0.95	GK 77 GRF37 GKF 77 GRF37 GKA 77 GRF37 GKAF 77 GRF37	Y..80M_1-4 AM80 AD2
3.20	1460	428	16000	1.05		
3.80	1260	367	17100	1.20		
4.20	1120	328	17800	1.35		
4.80	1000	290	18300	1.55	GK 77 GRF37 GKF 77 GRF37 GKA 77 GRF37 GKAF 77 GRF37	Y..80M_1-4 AM80 AD2
5.50	860	252	18800	1.80		
6.20	755	221	19100	2.00		
7.10	665	195	19300	2.30		
7.90	595	175	19500	2.60		
9.00	525	154	19600	3.00		
5.00	950	279	7650	0.85	GK 67 GRF37 GKF 67 GRF37 GKA 67 GRF37 GKAF 67 GRF37	Y..80M_1-4 AM80 AD2
5.60	840	246	10100	0.95		
6.40	745	217	10900	1.10		
7.20	655	191	11600	1.25		
7.20	655	192	5460	0.90	GK 57 GRF37 GKF 57 GRF37 GKA 57 GRF37 GKAF 57 GRF37	Y..80M_1-4 AM80 AD2
8.30	570	166	7870	1.05		
9.60	500	145	8420	1.20		
11.0	445	129	8660	1.35		
12.0	380	111	8960	1.55		
14.0	335	97	9140	1.80		
4.60	1130	197.37	28700	2.40	GK 87 GKF 87 GKA 87 GKAF 87	Y..80M_2-6 AM80 AD2
5.20	990	174.19	28800	2.70		
5.60	940	164.34	28800	2.90		
6.20	840	147.32	28900	3.20		
5.90	880	154.02	18700	1.75	GK 77 GKF 77 GKA 77 GKAF 77	Y..80M_2-6 AM80 AD2
6.80	775	135.28	19100	2.00		
7.10	735	128.52	19200	2.10		
8.10	650	113.56	19400	2.40		
9.00	585	154.02	19500	2.60	GK 77 GKF 77 GKA 77 GKAF 77	Y..80M_1-4 AM80 AD2
10.0	510	135.28	19700	3.00		
11.0	485	128.52	19700	3.20		
12.0	430	113.56	19800	3.60		
14.0	365	97.05	19900	4.20		
7.40	705	123.54	11200	1.15	GK 67 GKF 67 GKA 67 GKAF 67	Y..80M_2-6 AM80 AD2
8.50	620	108.03	11800	1.30		
8.90	585	102.62	12000	1.40		
10.0	515	90.04	12300	1.60		
12.0	435	76.37	12700	1.85		

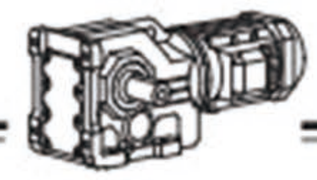

n_2 [1/min]	M_2 [Nm]	i	Fr [N]	K	Frame size	Input Configuration
P_1=0.55kw						
11.0	470	123.54	12500	1.75	GK 67 GKF 67 GKA 67 GKAF 67	Y..80M$_1$-4 AM80 AD2
13.0	410	108.03	12800	2.00		
15.0	340	90.04	13000	2.40		
18.0	290	76.37	13000	2.80		
8.40	620	108.29	7450	0.95	GK 57 GKF 57 GKA 57 GKAF 57	Y..80M$_2$-6 AM80 AD2
8.90	590	102.88	7710	1.00		
10.0	515	90.26	8280	1.15		
12.0	435	76.56	8710	1.35		
13.0	395	69.12	8900	1.50		
15.0	345	60.81	9100	1.70		
16.0	325	57.42	9170	1.80		
11.0	470	123.85	8560	1.25	GK 57 GKF 57 GKA 57 GKAF 57	Y..80M$_1$-4 AM80 AD2
13.0	410	108.29	8830	1.45		
13.0	390	102.88	8920	1.55		
15.0	340	90.26	9120	1.75		
18.0	290	76.56	9320	2.10		
20.0	260	69.12	9420	2.30		
23.0	230	60.81	9530	2.60		
24.0	215	57.42	9570	2.80		
13.0	395	104.37	5960	1.00	GK 47 GKF 47 GKA 47 GKAF 47	Y..80M$_1$-4 AM80 AD2
15.0	345	90.86	6600	1.15		
16.0	320	85.12	6830	1.25		
18.0	285	75.20	7180	1.40		
20.0	265	69.84	7340	1.50		
22.0	240	63.30	7520	1.65		
24.0	215	56.83	7680	1.85		
28.0	186	48.95	7840	2.20		
30.0	175	46.03	7900	2.30		
24.0	220	58.6	4840	0.90	GK 37 GKF 37 GKA 37 GKAF 37	Y..80M$_1$-4 AM80 AD1
28.0	190	49.79	4780	1.05		
31.0	169	44.46	4730	1.20		
36.0	144	37.97	4630	1.40		
39.0	135	35.57	4580	1.50		
46.0	114	29.96	4460	1.75	GK 37 GKF 37 GKA 37 GKAF 37	Y..80M$_1$-4 AM80 AD2
48.0	110	28.83	4420	1.80		
55.0	95	24.99	4310	2.10		
59.0	89	23.36	4250	2.20		
68.0	77	20.19	4120	2.40		
80.0	65	17.15	3970	2.80		
90.0	58	15.31	3860	3.00	GK 37 GKF 37 GKA 37 GKAF 37	Y..80M$_1$-4 AM80 AD2
105	50	13.08	3720	3.30		
114	46	12.14	3650	3.50		
132	40	10.49	3510	4.00		
155	34	8.91	3360	4.70		
173	30	7.96	3260	5.10		
203	26	6.8	3120	5.80		
217	24	6.37	3060	6.00	GK 37 GKF 37 GKA 37 GKAF 37	Y..80M$_1$-4 AM80 AD2
257	20	5.36	2910	6.90		
347	15	3.98	2670	8.30		

n_2 [1/min]	M_2 [Nm]	i	Fr [N]	K	Frame size	Input Configuration
P_1=0.75kw						
0.11	55500	13116	190000	0.90	GK 187 GRF97 GKH 187 GRF97	Y..80M$_2$-4 AM80 AD3
0.12	48600	11647	190000	1.05		
0.20	31300	7343	190000	1.60		
0.21	28500	6747	190000	1.75		
0.24	25000	5991	190000	2.00		
0.17	36800	8628	150000	0.85	GK 167 GRF97 GKH 167 GRF97	Y..80M$_2$-4 AM80 AD3
0.22	28000	6562	150000	1.15		
0.27	22300	5355	150000	1.45		
0.35	17200	4079	150000	1.85		
0.43	14400	3376	150000	2.20		
0.36	16900	3979	112700	1.05	GK 157 GRF97 GKF 157 GRF97 GKA 157 GRF97 GKAF157 GRF97	Y..80M$_2$-4 AM80 AD3
0.47	13000	3051	114300	1.40		
0.87	7160	1659	116000	2.50	GK 157 GRF97 GKF 157 GRF97 GKA 157 GRF97 GKAF157 GRF97	Y..80M$_2$-4 AM80 AD4
1.00	5770	1365	116200	3.10	GK 157 GRF97 GKF 157 GRF97 GKA 157 GRF97 GKAF157 GRF97	Y..80M$_2$-4 AM80 AD5
0.43	14500	3311	77000	0.90	GK 127 GRF77 GKF 127 GRF77 GKA 127 GRF77 GKAF127 GRF77	Y..80M$_2$-4 AM80 AD2
0.48	13100	3009	79100	1.00		
0.55	11200	2607	80100	1.15		
0.74	8650	1926	81200	1.50	GK 127 GRF77 GKF 127 GRF77 GKA 127 GRF77 GKAF127 GRF77	Y..80M$_2$-4 AM80 AD3
0.82	7880	1757	81500	1.65		
0.93	6880	1541	81800	1.90		
1.10	6020	1342	82100	2.20		
1.20	5250	1177	82200	2.50	GK 127 GRF77 GKF 127 GRF77 GKA 127 GRF77 GKAF127 GRF77	Y..80M$_2$-4 AM80 AD3
1.40	4600	1025	82400	2.80		
1.60	4010	899	82500	3.20		
0.84	7710	1713	65000	1.05	GK 107 GRF77 GKF 107 GRF77 GKA 107 GRF77 GKAF107 GRF77	Y..80M$_2$-4 AM80 AD3
0.92	7000	1554	65000	1.15		
1.10	6020	1336	65000	1.35		
1.20	5250	1166	65000	1.50		
1.40	4540	1030	65000	1.75		
1.60	3960	904	65000	2.00		
1.80	3560	793	65000	2.20		
2.10	3100	696	65000	2.60		
2.30	2690	615	65000	3.00		
1.30	5030	1102	39900	0.85	GK 97 GRF57 GKF 97 GRF57 GKA 97 GRF57 GKAF 97 GRF57	Y..80M$_2$-4 AM80 AD2
1.50	4410	957	40000	0.95		
1.70	3940	855	40000	1.10		
2.50	2620	573	40000	1.65		
1.90	3320	743	40000	1.30	GK 97 GRF57 GKF 97 GRF57 GKA 97 GRF57 GKAF 97 GRF57	Y..80M$_2$-4 AM80 AD3
2.20	2930	652	40000	1.45		
2.80	2250	504	40000	1.90		
3.30	1940	437	40000	2.20		
3.80	1720	382	40000	2.50		
4.70	1390	305	40000	3.10		

n_2 [1/min]	M_2 [Nm]	i	Fr [N]	K	Frame size	Input Configuration
P_1=0.75kw						
5.60	1170	258	40000	3.70	GK 97 GRF57 GKF 97 GRF57 GKA 97 GRF57 GKAF 97 GRF57	Y..80M_2-4 AM80 AD3
6.20	1050	232	40000	4.10		
7.20	890	199	40000	4.80		
2.00	3270	726	26500	0.80	GK 87 GRF57 GKF 87 GRF57 GKA 87 GRF57 GKAF 87 GRF57	Y..80M_2-4 AM80 AD2
2.20	2890	638	27000	0.95	GK 87 GRF57 GKF 87 GRF57 GKA 87 GRF57 GKAF 87 GRF57	Y..80M_2-4 AM80 AD3
2.60	2530	562	27500	1.05		
3.00	2130	474	27900	1.25		
3.40	1910	426	28100	1.40		
3.80	1680	373	28300	1.60		
4.40	1470	330	28500	1.85		
4.90	1310	294	28600	2.0	GK 87 GRF57 GKF 87 GRF57 GKA 87 GRF57 GKAF 87 GRF57	Y..80M_2-4 AM80 AD3
5.70	1130	250	28700	2.4		
6.10	1070	236	28700	2.5		
7.10	910	201	28800	3.0		
3.90	1670	367	14400	0.95	GK 77 GRF37 GKF 77 GRF37 GKA 77 GRF37 GKAF 77 GRF37	Y..80M_2-4 AM80 AD2
4.40	1490	328	15800	1.05		
5.00	1320	290	16800	1.15		
5.70	1140	252	17700	1.35		
6.50	1000	221	18300	1.55		
5.40	1320	174.19	28600	2.00	GK 87 GKF 87 GKA 87 GKAF 87	Y..90S-6 AM90 AD2
5.70	1250	164.34	28600	2.20		
6.40	1120	147.32	28700	2.40		
7.40	960	126.91	28800	2.80		
7.30	980	197.37	28800	2.70	GK 87 GKF 87 GKA 87 GKAF 87	Y..80M_2-4 AM80 AD2
8.20	860	174.19	28800	3.10		
8.70	820	164.34	28900	3.30		
9.70	735	147.32	28900	3.70		
7.00	1030	135.28	18200	1.50	GK 77 GKF 77 GKA 77 GKAF 77	Y..90S-6 AM90 AD2
7.30	970	128.52	18400	1.60		
8.30	860	113.56	18800	1.80		
9.70	735	97.05	19200	2.10		
11.0	675	88.97	19300	2.30		
9.30	765	154.02	19100	2.00	GK 77 GKF 77 GKA 77 GKAF 77	Y..80M_2-4 AM80 AD2
11.0	675	135.28	19300	2.30		
11.0	640	128.52	19400	2.40		
13.0	565	113.56	19600	2.70		
15.0	480	97.05	19700	3.20		
12.0	615	123.54	11800	1.35	GK 67 GKF 67 GKA 67 GKAF 67	Y..80M_2-4 AM80 AD2
13.0	535	108.03	12200	1.50		
16.0	445	90.04	12600	1.80		
19.0	380	76.37	12900	2.20		
21.0	340	68.95	13000	2.40		
24.0	300	60.66	13000	2.70		
25.0	285	57.28	13000	2.90		

n_2 [1/min]	M_2 [Nm]	i	Fr [N]	K	Frame size	Input Configuration
P_1=0.75kw						
12.0	615	123.85	7480	0.95	GK 57 GKF 57 GKA 57 GKAF 57	Y..80M_2-4 AM80 AD2
13.0	540	108.29	8110	1.10		
14.0	510	102.88	8320	1.15		
16.0	450	90.26	8660	1.35		
19.0	380	76.56	8960	1.55		
21.0	345	69.12	9110	1.75		
24.0	300	60.81	9270	2.00		
25.0	285	57.42	9340	2.10		
29.0	240	48.89	9490	2.50		
32.0	220	44.43	9560	2.70		
19.0	375	75.20	6260	1.05	GK 47 GKF 47 GKA 47 GKAF 47	Y..80M_2-4 AM80 AD2
21.0	345	69.84	6570	1.15		
23.0	315	63.30	6910	1.25		
25.0	280	56.83	7200	1.40		
29.0	240	48.95	7500	1.65		
31.0	225	46.03	7600	1.75		
36.0	198	39.61	7780	2.00		
41.0	177	35.39	7700	2.30		
46.0	156	31.3	7490	2.60		
32.0	220	44.46	4170	0.90	GK 37 GKF 37 GKA 37 GKAF 37	Y..80M_2-4 AM80 AD1
38.0	190	37.97	4140	1.05		
40.0	178	35.57	4130	1.15		
48.0	150	29.96	4060	1.35	GK 37 GKF 37 GKA 37 GKAF 37	Y..80M_2-4 AM80 AD2
50.0	144	28.83	4040	1.40		
57.0	125	24.99	3970	1.60		
61.0	117	23.36	3930	1.65		
71.0	101	20.19	3840	1.85		
84.0	86	17.15	3720	2.10		
94.0	76	15.31	3640	2.30		
110	65	13.08	3520	2.50		
118	61	12.14	3460	2.60		
137	52	10.49	3350	3.00		
161	44	8.91	3220	3.60		
180	40	7.96	3130	3.90		
211	34	6.8	3000	4.40	GK 37 GKF 37 GKA 37 GKAF 37	Y..80M_2-4 AM80 AD2
225	32	6.37	2950	4.60		
268	27	5.36	2810	5.20		
361	20	3.98	2590	6.30		
P_1=1.1kw						
0.15	58700	9363	190000	0.85	GK 187 GRF97 GKH 187 GRF97	Y..90S-4 AM90 AD3
0.17	50200	8126	190000	1.00		
0.19	47600	7343	190000	1.05		
0.21	43500	6747	190000	1.15		
0.24	38300	5991	190000	1.30		
0.27	33900	5358	190000	1.45	GK 187 GRF97 GKH 187 GRF97	Y..90S-4 AM90 AD4
0.29	30200	4817	190000	1.65		
0.32	27400	4370	190000	1.80		
0.27	34200	5355	150000	0.95	GK 167 GRF97 GKH 167 GRF97	Y..90S-4 AM90 AD3
0.30	30300	4788	150000	1.05		
0.35	26300	4079	150000	1.20		
0.42	21900	3376	150000	1.45		

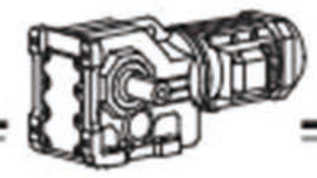

n_2 [1/min]	M_2 [Nm]	i	Fr [N]	K	Frame size	Input Configuration
P_1=1.1kw						
0.52	17600	2755	150000	1.80	GK 167 GRF97 GKH 167 GRF97	Y..90S-4 AM90 AD3
0.65 **1.00**	14300 9240	2182 1408	150000 150000	2.20 3.50	GK 167 GRF97 GKH 167 GRF97	Y..90S-4 AM90 AD4
0.83 **1.10**	11100 8460	1704 1296	150000 150000	2.90 3.80	GK 167 GRF97 GKH 167 GRF97	Y..90S-4 AM90 AD5
0.40 **0.47**	22200 19800	3516 3051	109700 111200	0.80 0.90	GK 157 GRF97 GKF 157 GRF97 GKA 157 GRF97 GKAF157 GRF97	Y..90S-4 AM90 AD3
0.54 **0.61** **0.86**	16300 14500 10800	2610 2322 1659	113000 113700 115000	1.10 1.25 1.65	GK 157 GRF97 GKF 157 GRF97 GKA 157 GRF97 GKAF157 GRF97	Y..90S-4 AM90 AD4
1.00 **1.20** **1.30** **1.50** **1.70**	8840 7880 7010 6040 5420	1365 1229 1093 942 854	115600 115800 116000 116200 116300	2.00 2.30 2.60 3.00 3.30	GK 157 GRF97 GKF 157 GRF97 GKA 157 GRF97 GKAF157 GRF97	Y..90S-4 AM90 AD5
0.74 **0.81** **0.92** **1.10** **1.20** **1.40** **1.60** **1.80**	12900 11800 10300 9030 7900 6900 6030 5190	1926 1757 1541 1342 1177 1025 899 790	79200 79800 80500 81100 81500 81800 82000 82300	1.00 1.10 1.25 1.45 1.65 1.90 2.20 2.50	GK 127 GRF77 GKF 127 GRF77 GKA 127 GRF77 GKAF127 GRF77	Y..90S-4 AM90 AD3
2.00 **2.30** **2.60** **3.00**	4700 4040 3650 3140	704 610 549 477	82400 82500 82600 82600	2.80 3.20 3.60 4.10	GK 127 GRF77 GKF 127 GRF77 GKA 127 GRF77 GKAF127 GRF77	Y..90S-4 AM90 AD4
1.20 **1.40** **1.60** **1.80** **2.00** **2.30** **2.70** **3.10** **3.50**	7870 6860 5990 5340 4670 4080 3460 3040 2680	1166 1030 904 793 696 615 522 461 408	65000 65000 65000 65000 65000 65000 65000 65000 65000	1.00 1.15 1.35 1.50 1.70 1.95 2.30 2.60 3.00	GK 107 GRF77 GKF 107 GRF77 GKA 107 GRF77 GKAF107 GRF77	Y..90S-4 AM90 AD3
3.90 **4.50**	2420 2120	364 318	65000 65000	3.30 3.80	GK 107 GRF77 GKF 107 GRF77 GKA 107 GRF77 GKAF107 GRF77	Y..90S-4 AM90 AD4
2.50	3920	573	40000	1.10	GK 97 GRF57 GKF 97 GRF57 GKA 97 GRF57 GKAF 97 GRF57	Y..90S-4 AM90 AD2

n_2 [1/min]	M_2 [Nm]	i	Fr [N]	K	Frame size	Input Configuration
P_1=1.1kw						
1.90 **2.20** **2.80** **3.20**	4990 4390 3380 2920	743 652 504 437	39900 40000 40000 40000	0.85 1.00 1.25 1.45	GK 97 GRF57 GKF 97 GRF57 GKA 97 GRF57 GKAF 97 GRF57	Y..90S-4 AM90 AD3
3.70 **4.20**	2580 2280	382 342	40000 40000	1.65 1.90	GK 97 GRF57 GKF 97 GRF57 GKA 97 GRF57 GKAF 97 GRF57	Y..90S-4 AM90 AD3
3.00 **3.30** **3.80** **4.30**	3200 2870 2530 2210	474 426 373 330	26600 27100 27500 27800	0.85 0.95 1.05 1.20	GK 87 GRF57 GKF 87 GRF57 GKA 87 GRF57 GKAF 87 GRF57	Y..90S-4 AM90 AD3
4.80 **5.70** **6.00** **7.10**	1980 1700 1610 1360	294 250 236 201	28100 28300 28400 28600	1.35 1.60 1.70 1.95	GK 87 GRF57 GKF 87 GRF57 GKA 87 GRF57 GKAF 87 GRF57	Y..90S-4 AM90 AD3
5.30 **6.10** **6.70** **7.60**	1960 1710 1560 1380	176.05 153.21 140.28 123.93	40000 40000 40000 40000	2.20 2.50 2.70 3.10	GK 97 GKF 97 GKA 97 GKAF 97	Y..90L-6 AM90 AD3
8.10 **9.30** **10.0**	1300 1130 1030	176.05 153.21 140.28	40000 40000 40000	3.30 3.80 4.10	GK 97 GKF 97 GKA 97 GKAF 97	Y..90S-4 AM90 AD3
6.40 **7.40**	1640 1410	147.32 126.91	28400 28500	1.65 1.90	GK 87 GKF 87 GKA 87 GKAF 87	Y..90L-6 AM90 AD2
8.20 **8.60** **9.60** **11.0** **12.0**	1280 1210 1080 930 850	174.19 164.34 147.32 126.91 115.82	28600 28700 28700 28800 28900	2.10 2.20 2.50 2.90 3.20	GK 87 GKF 87 GKA 87 GKAF 87	Y..90S-4 AM90 AD2
8.30 **9.70**	1260 1080	113.56 97.05	17100 18000	1.20 1.45	GK 77 GKF 77 GKA 77 GKAF 77	Y..90L-6 AM90 AD2
10.0 **11.0** **12.0** **15.0** **16.0** **18.0** **19.0**	1000 950 840 715 655 575 545	135.28 128.52 113.56 97.05 88.97 78.07 73.99	18300 18500 18900 19200 19400 19500 19600	1.55 1.65 1.85 2.20 2.40 2.70 2.80	GK 77 GKF 77 GKA 77 GKAF 77	Y..90S-4 AM90 AD2
13.0 **14.0** **16.0** **19.0** **21.0**	795 755 665 560 510	108.03 102.62 90.04 76.37 68.95	10500 10800 11500 12100 12400	1.05 1.10 1.25 1.45 1.60	GK 67 GKF 67 GKA 67 GKAF 67	Y..90S-4 AM90 AD2

n_2 [1/min]	M_2 [Nm]	i	Fr [N]	K	Frame size	Input Configuration
P_1=1.1kw						
23.0	445	60.66	12600	1.85	GK 67 GKF 67 GKA 67 GKAF 67	Y..90S-4 AM90 AD2
25.0	420	57.28	12700	1.95		
29.0	360	48.77	12900	2.30		
32.0	325	44.32	13000	2.50		
37.0	280	38.39	13000	2.80		
16.0	665	90.26	4300	0.90	GK 57 GKF 57 GKA 57 GKAF 57	Y..90S-4 AM90 AD2
19.0	565	76.56	7900	1.05		
21.0	510	69.12	8330	1.15		
23.0	445	60.81	8660	1.35		
25.0	420	57.42	8770	1.40		
29.0	360	48.89	9040	1.65		
32.0	325	44.43	9180	1.85		
37.0	280	38.49	9340	2.10		
40.0	260	35.7	9420	2.30		
47.0	220	30.28	9550	2.70		
52.0	200	27.34	9480	3.00		
59.0	178	24.05	9190	3.40		
63.0	168	22.71	9060	3.60		
73.0	143	19.34	8690	4.00		
81.0	130	17.57	8470	4.30		
93.0	113	15.22	8150	4.80	GK 57 GKF 57 GKA 57 GKAF 57	Y..90S-4 AM90 AD3
107	98	13.25	7850	5.20		
119	88	11.92	7540	4.70		
126	83	11.26	7420	5.00		
148	71	9.59	7090	5.70		
163	64	8.71	6900	6.10		
188	56	7.55	6620	6.50		
216	49	6.57	6360	7.10		
303	35	4.69	5750	8.60		
25.0	420	56.83	4240	0.95	GK 47 GKF 47 GKA 47 GKAF 47	Y..90S-4 AM90 AD2
29.0	360	48.95	6420	1.10		
31.0	340	46.03	6660	1.15		
36.0	290	39.61	7120	1.35		
40.0	260	35.39	7080	1.55		
45.0	230	31.3	6940	1.75		
48.0	215	29.32	6870	1.85		
55.0	192	25.91	6720	2.10		
65.0	161	21.81	6490	2.50		
73.0	145	19.58	6340	2.80		
47.0	220	29.96	3430	0.90	GK 37 GKF 37 GKA 37 GKAF 37	Y..90S-4 AM90 AD2
57.0	185	24.99	3440	1.10		
61.0	173	23.36	3440	1.15		
70.0	149	20.19	3410	1.25		
83.0	127	17.15	3360	1.40		
93.0	113	15.31	3320	1.55		
109	97	13.08	3250	1.70		
117	90	12.14	3210	1.80	GK 37 GKF 37 GKA 37 GKAF 37	Y..90S-4 AM90 AD2
135	78	10.49	3130	2.10		
159	66	8.91	3040	2.40		
178	59	7.96	2960	2.60		
209	50	6.8	2860	3.00		
223	47	6.37	2820	3.10		
265	40	5.36	2710	3.50		
357	29	3.98	2510	4.20		

n_2 [1/min]	M_2 [Nm]	i	Fr [N]	K	Frame size	Input Configuration
P_1=1.5kw						
0.21	59800	6747	190000	0.85	GK 187 GRF97 GKH 187 GRF97	Y..90L-4 AM90 AD3
0.24	52800	5991	190000	0.95		
0.27	46900	5358	190000	1.05	GK 187 GRF97 GKH 187 GRF97	Y..90L-4 AM90 AD4
0.30	41800	4817	190000	1.20		
0.33	37900	4370	190000	1.30		
0.40	32500	3609	190000	1.55		
0.47	27500	3062	190000	1.80		
0.57	22400	2519	190000	2.20	GK 187 GRF97 GKH 187 GRF97	Y..90L-4 AM90 AD5
0.63	20000	2268	190000	2.50		
0.35	36100	4079	150000	0.90	GK 167 GRF97 GKH 167 GRF97	Y..90L-4 AM90 AD3
0.42	30000	3376	150000	1.05		
0.52	24200	2755	150000	1.30		
0.66	19600	2182	150000	1.60	GK 167 GRF97 GKH 167 GRF97	Y..90L-4 AM90 AD4
1.00	12600	1408	150000	2.50		
0.84	15300	1704	150000	2.10	GK 167 GRF97 GKH 167 GRF97	Y..90L-4 AM90 AD5
1.10	11600	1296	150000	2.80		
0.62	20100	2322	111000	0.90	GK 157 GRF97 GKF 157 GRF97 GKA 157 GRF97 GKAF157 GRF97	Y..90L-4 AM90 AD4
0.86	14900	1659	113600	1.20		
1.00	12100	1365	114600	1.50	GK 157 GRF97 GKF 157 GRF97 GKA 157 GRF97 GKAF157 GRF97	Y..90L-4 AM90 AD5
1.20	10800	1229	115000	1.65		
1.30	9680	1093	115400	1.85		
1.50	8350	942	115700	2.20		
1.70	7500	854	115900	2.40		
2.50	4930	567	116300	3.60		
2.80	4380	504	116400	4.10		
2.70	4750	536	82400	2.70	GK 127 GRF87 GKF 127 GRF87 GKA 127 GRF87 GKAF127 GRF87	Y..90L-4 AM90 AD4
3.40	3740	418	82500	3.50		
3.90	3290	367	82600	3.90	GK 127 GRF87 GKF 127 GRF87 GKA 127 GRF87 GKAF127 GRF87	Y..90L-4 AM90 AD5
0.81	16100	1757	73600	0.80	GK 127 GRF77 GKF 127 GRF77 GKA 127 GRF77 GKAF127 GRF77	Y..90L-4 AM90 AD3
0.93	14100	1541	77700	0.90		
1.10	12300	1342	79600	1.05		
1.20	10700	1177	80300	1.20		
1.40	9410	1025	80900	1.40		
1.60	8230	899	81400	1.60		
1.80	7130	790	81700	1.80		
2.00	6420	704	81900	2.00	GK 127 GRF77 GKF 127 GRF77 GKA 127 GRF77 GKAF127 GRF77	Y..90L-4 AM90 AD4
2.30	5540	610	82200	2.40		
2.60	5000	549	82300	2.60		
3.00	4300	477	82400	3.00		
3.40	3810	418	82500	3.40		

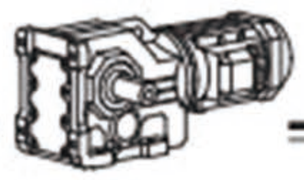

n_2 [1/min]	M_2 [Nm]	i	Fr [N]	K	Frame size	Input Configuration
P_1=1.5kw						
1.40	9380	1030	65000	0.85	GK 107 GRF77 GKF 107 GRF77 GKA 107 GRF77 GKAF107 GRF77	Y..90L-4 AM90 AD3
1.60	8200	904	65000	1.00		
1.80	7280	793	65000	1.10		
2.10	6370	696	65000	1.25		
2.30	5580	615	65000	1.45		
2.70	4730	522	65000	1.70		
3.10	4160	461	65000	1.90		
3.50	3680	408	65000	2.20		
3.90	3310	364	65000	2.40	GK 107 GRF77 GKF 107 GRF77 GKA 107 GRF77 GKAF107 GRF77	Y..90L-4 AM90 AD4
4.50	2900	318	65000	2.80		
2.50	5340	573	39500	0.80	GK 97 GRF57 GKF 97 GRF57 GKA 97 GRF57 GKAF 97 GRF57	Y..90L-4 AM90 AD2
2.80	4610	504	40000	0.95	GK 97 GRF57 GKF 97 GRF57 GKA 97 GRF57 GKAF 97 GRF57	Y..90L-4 AM90 AD3
3.30	3980	437	40000	1.10		
3.70	3510	382	40000	1.20		
4.20	3110	342	40000	1.40		
4.70	2830	305	40000	1.50		
5.60	2390	258	40000	1.80		
6.20	2150	232	40000	2.00		
7.20	1840	199	40000	2.30		
4.30	3020	330	26900	0.90	GK 87 GRF57 GKF 87 GRF57 GKA 87 GRF57 GKAF 87 GRF57	Y..90L-4 AM90 AD3
4.90	2700	294	27300	1.00		
5.70	2320	250	27700	1.15		
6.00	2190	236	27900	1.25		
7.10	1860	201	28200	1.45		
7.80	1690	183	28300	1.60		
5.30	2680	176.05	40000	1.60	GK 97 GKF 97 GKA 97 GKAF 97	Y..100L-6 AM100 AD3
6.10	2330	153.21	40000	1.85		
6.70	2130	140.28	40000	2.00		
7.60	1880	123.93	40000	2.30		
8.10	1760	176.05	40000	2.40	GK 97 GKF 97 GKA 97 GKAF 97	Y..90L-4 AM90 AD3
9.30	1530	153.21	40000	2.80		
10.0	1400	140.28	40000	3.10		
12.0	1240	123.93	40000	3.50		
6.40	2240	147.32	27800	1.20	GK 87 GKF 87 GKA 87 GKAF 87	Y..100L-6 AM100 AD2
7.40	1930	126.91	28100	1.40		
8.10	1760	115.82	28300	1.55		
9.20	1560	102.71	28400	1.75		
8.20	1740	174.19	28300	1.55	GK 87 GKF 87 GKA 87 GKAF 87	Y..90L-4 AM90 AD2
8.70	1640	164.34	28400	1.65		
9.70	1470	147.32	28500	1.85		
11.0	1270	126.91	28600	2.10		
12.0	1160	115.82	28700	2.30		
14.0	1020	102.71	28800	2.60		
17.0	860	86.34	28900	3.10		

n_2 [1/min]	M_2 [Nm]	i	Fr [N]	K	Frame size	Input Configuration
P_1=1.5kw						
8.30	1730	113.56	14000	0.90	GK 77 GKF 77 GKA 77 GKAF 77	Y..100L-6 AM100 AD2
9.70	1470	97.05	15900	1.05		
11.0	1350	88.97	16600	1.15		
12.0	1180	78.07	17500	1.30		
11.0	1350	135.28	16600	1.15	GK 77 GKF 77 GKA 77 GKAF 77	Y..90L-4 AM90 AD2
11.0	1280	128.52	17000	1.20		
13.0	1130	113.56	17700	1.35		
15.0	970	97.05	18400	1.60		
16.0	890	88.97	18700	1.75		
18.0	780	78.07	19000	2.00		
19.0	740	73.99	19200	2.10		
22.0	645	64.75	19400	2.40		
25.0	580	58.34	19500	2.60		
28.0	510	51.18	19700	3.00		
32.0	450	45.16	19800	3.40		
36.0	400	40.04	19900	3.90	GK 77 GKF 77 GKA 77 GKAF 77	Y..90L-4 AM90 AD3
16.0	900	90.04	9500	0.90	GK 67 GKF 67 GKA 67 GKAF 67	Y..90L-4 AM90 AD2
19.0	765	76.37	10800	1.05		
21.0	690	68.95	11300	1.20		
24.0	605	60.66	11900	1.35		
25.0	570	57.28	12000	1.45		
29.0	485	48.77	12500	1.70		
32.0	440	44.32	12600	1.85		
37.0	380	38.39	12900	2.10		
40.0	355	35.62	13000	2.30		
47.0	300	30.22	13000	2.70	GK 67 GKF 67 GKA 67 GKAF 67	Y..90L-4 AM90 AD3
52.0	270	27.28	13000	3.00		
60.0	240	24	13000	3.30		
24.0	605	60.81	7560	1.00	GK 57 GKF 57 GKA 57 GKAF 57	Y..90L-4 AM90 AD2
25.0	575	57.42	7830	1.05		
29.0	485	48.89	8470	1.25		
32.0	445	44.43	8680	1.35		
37.0	385	38.49	8940	1.55		
40.0	355	35.7	9060	1.70		
47.0	300	30.28	9170	2.00		
52.0	270	27.34	8990	2.20		
59.0	240	24.05	8750	2.50		
63.0	225	22.71	8640	2.60		
74.0	194	19.34	8340	3.00		
36.0	395	39.61	5970	1.00	GK 47 GKF 47 GKA 47 GKAF 47	Y..90L-4 AM90 AD2
40.0	350	35.39	6350	1.15		
46.0	310	31.3	6300	1.30		
49.0	290	29.32	6260	1.35		
55.0	255	25.91	6180	1.55		
66.0	215	21.81	6040	1.85		
73.0	196	19.58	5940	2.00		

n_2 [1/min]	M_2 [Nm]	i	Fr [N]	K	Frame size	Input Configuration
P_1=1.5kw						
85.0	169	16.86	5780	2.20	GK 47 GKF 47 GKA 47 GKAF 47	Y..90L-4 AM90 AD2
90.0	159	15.86	5720	2.40		
105	137	13.65	5550	2.60		
117	122	12.19	5420	2.90		
122	118	11.77	5320	2.40		
61.0	230	23.36	2870	0.85	GK 37 GKF 37 GKA 37 GKAF 37	Y..90L-4 AM90 AD2
71.0	200	20.19	2920	0.90		
83.0	172	17.15	2940	1.05		
93.0	153	15.31	2940	1.15		
109	131	13.08	2930	1.25		
118	122	12.14	2920	1.30		
136	105	10.49	2880	1.50		
160	89	8.91	2820	1.80		
180	80	7.96	2770	1.95		
210	68	6.8	2700	2.20		
225	64	6.37	2660	2.30		
267	54	5.36	2570	2.60		
359	40	3.98	2410	3.10		
P_1=2.2kw						
0.33	57000	4370	190000	0.90	GK 187 GRF97 GKH 187 GRF97	Y..100L$_1$-4 AM100 AD4
0.51	35900	2818	190000	1.40		
0.39	48400	3609	190000	1.05		
0.47	41100	3062	190000	1.20		
0.57	33500	2519	190000	1.50	GK 187 GRF97 GKH 187 GRF97	Y..100L$_1$-4 AM100 AD5
0.63	30100	2268	190000	1.65		
0.69	27100	2054	190000	1.85		
0.78	23800	1821	190000	2.10		
0.89	21200	1605	190000	2.40		
0.52	36200	2755	150000	0.90	GK 167 GRF97 GKH 167 GRF97	Y..100L$_1$-4 AM100 AD3
0.63	29100	2263	150000	1.10	GK 167 GRF97 GKH 167 GRF97	Y..100L$_1$-4 AM100 AD4
0.65	29300	2182	150000	1.10		
1.00	18800	1408	150000	1.70		
0.84	22800	1704	150000	1.40	GK 167 GRF97 GKH 167 GRF97	Y..100L$_1$-4 AM100 AD5
1.10	17300	1296	150000	1.85		
1.30	14400	1101	150000	2.20		
1.50	12400	944	150000	2.60	GK 167 GRF97 GKH 167 GRF97	Y..100L$_1$-4 AM100 AD5
0.86	22200	1659	109700	0.80	GK 157 GRF97 GKF 157 GRF97 GKA 157 GRF97 GKAF157 GRF97	Y..100L$_1$-4 AM100 AD4
1.00	18200	1365	112100	1.00	GK 157 GRF97 GKF 157 GRF97 GKA 157 GRF97 GKAF157 GRF97	Y..100L$_1$-4 AM100 AD5
1.20	16300	1229	113000	1.10		
1.30	14500	1093	113800	1.25		
1.50	12500	942	114500	1.45		
1.70	11200	854	114900	1.60		
1.90	9760	756	115400	1.85		

n_2 [1/min]	M_2 [Nm]	i	Fr [N]	K	Frame size	Input Configuration
P_1=2.2kw						
2.70	7110	536	81700	1.85	GK 127 GRF87 GKF 127 GRF87 GKA 127 GRF87 GKAF127 GRF87	Y..100L$_1$-4 AM100 AD4
3.00	6220	473	82000	2.10		
3.40	5610	418	82200	2.30		
3.90	4910	367	82300	2.60	GK 127 GRF87 GKF 127 GRF87 GKA 127 GRF87 GKAF127 GRF87	Y..100L$_1$-4 AM100 AD5
4.30	4400	330	82400	3.00		
1.40	13900	1025	78100	0.95	GK 127 GRF77 GKF 127 GRF77 GKA 127 GRF77 GKAF127 GRF77	Y..100L$_1$-4 AM100 AD3
1.60	12200	899	79600	1.05		
1.80	10600	790	80400	1.20		
2.00	9530	704	80900	1.35	GK 127 GRF77 GKF 127 GRF77 GKA 127 GRF77 GKAF127 GRF77	Y..100L$_1$-4 AM100 AD4
2.30	8230	610	81400	1.60		
2.60	7420	549	81600	1.75		
3.00	6410	477	81900	2.00		
3.40	5650	418	82100	2.30		
2.30	8300	615	65000	0.95	GK 107 GRF77 GKF 107 GRF77 GKA 107 GRF77 GKAF107 GRF77	Y..100L$_1$-4 AM100 AD3
2.70	7040	522	65000	1.15		
3.10	6190	461	65000	1.30		
3.50	5480	408	65000	1.45		
3.90	4920	364	65000	1.60	GK 107 GRF77 GKF 107 GRF77 GKA 107 GRF77 GKAF107 GRF77	Y..100L$_1$-4 AM100 AD4
4.50	4300	318	65000	1.85		
5.00	3870	286	65000	2.10		
5.70	3390	251	65000	2.40		
3.70	5200	382	39700	0.85	GK 97 GRF57 GKF 97 GRF57 GKA 97 GRF57 GKAF 97 GRF57	Y..100L$_1$-4 AM100 AD3
4.20	4620	342	40000	0.95		
4.70	4190	305	40000	1.00		
5.50	3540	258	40000	1.20		
6.10	3180	232	40000	1.35		
7.20	2730	199	40000	1.55		
6.20	3370	153.21	40000	1.30	GK 97 GKF 97 GKA 97 GKAF 97	Y..112M-6 AM112 AD3
6.80	3080	140.28	40000	1.40		
7.70	2720	123.93	40000	1.60		
9.10	2310	105.13	40000	1.85		
8.10	2590	176.05	40000	1.65	GK 97 GKF 97 GKA 97 GKAF 97	Y..100L$_1$-4 AM100 AD3
9.30	2250	153.21	40000	1.90		
10.0	2060	140.28	40000	2.10		
12.0	1820	123.93	40000	2.40		
14.0	1540	105.13	40000	2.80		
15.0	1420	96.8	40000	3.00		
9.70	2170	147.32	27900	1.25	GK 87 GKF 87 GKA 87 GKAF 87	Y..100L$_1$-4 AM100 AD2
11.0	1870	126.91	28200	1.45		
12.0	1700	115.82	28300	1.60		
14.0	1510	102.71	28500	1.80	GK 87 GKF 87 GKA 87 GKAF 87	Y..100L$_1$-4 AM100 AD2
16.0	1270	86.34	28600	2.10		

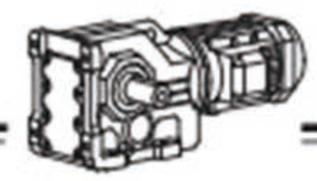

n_2 [1/min]	M_2 [Nm]	i	Fr [N]	K	Frame size	Input Configuration
P_1=2.2kw						
18.0 **20.0** **23.0**	1160 1030 920	79.34 70.46 63.00	28700 28800 28800	2.30 2.60 2.90	GK 87 GKF 87 GKA 87 GKAF 87	Y..100L$_1$-4 AM100 AD3
13.0 **15.0** **16.0** **18.0** **19.0** **22.0** **24.0**	1670 1430 1310 1150 1090 950 860	113.56 97.05 88.97 78.07 73.99 64.75 58.34	14400 16200 16900 17700 17900 18500 18800	0.95 1.10 1.20 1.35 1.40 1.60 1.80	GK 77 GKF 77 GKA 77 GKAF 77	Y..100L$_1$-4 AM100 AD2
28.0 **32.0**	750 665	51.18 45.16	19100 19300	2.00 2.30	GK 77 GKF 77 GKA 77 GKAF 77	Y..100L$_1$-4 AM100 AD2
13.0 **15.0** **16.0** **18.0** **19.0** **22.0** **24.0** **28.0** **32.0**	1670 1430 1310 1150 1090 950 860 750 665	113.56 97.05 88.97 78.07 73.99 64.75 58.34 51.18 45.16	14400 16200 16900 17700 17900 18500 18800 19100 19300	0.95 1.10 1.20 1.35 1.40 1.60 1.80 2.00 2.30	GK 77 GKF 77 GKA 77 GKAF 77	Y..100L$_1$-4 AM100 AD2
36.0 **40.0** **46.0**	590 515 455	40.04 35.2 30.89	19500 19700 19800	2.60 3.00 3.40	GK 77 GKF 77 GKA 77 GKAF 77	Y..100L$_1$-4 AM100 AD3
49.0 **56.0**	430 375	29.27 25.62	19800 19900	3.60 4.10	GK 77 GKF 77 GKA 77 GKAF 77	Y..100L$_1$-4 AM100 AD4
23.0 **25.0** **29.0** **32.0** **37.0** **40.0**	890 840 715 650 565 525	60.66 57.28 48.77 44.32 38.39 35.62	9590 10100 11100 11600 12100 12300	0.90 0.95 1.15 1.25 1.40 1.55	GK 67 GKF 67 GKA 67 GKAF 67	Y..100L$_1$-4 AM100 AD2
47.0 **52.0** **59.0** **63.0** **74.0** **81.0** **94.0** **108** **114** **134**	445 400 350 330 280 255 220 195 184 157	30.22 27.28 24 22.66 19.3 17.54 15.19 13.22 12.48 10.63	12600 12800 13000 13000 13000 13000 13000 13000 13000 13000	1.85 2.00 2.30 2.30 2.70 2.90 3.10 3.40 2.90 3.20	GK 67 GKF 67 GKA 67 GKAF 67	Y..100L$_1$-4 AM100 AD3
148	142	9.66	13000	3.40	GK 67 GKF 67 GKA 67 GKAF 67	Y..100L$_1$-4 AM100 AD3

n_2 [1/min]	M_2 [Nm]	i	Fr [N]	K	Frame size	Input Configuration
P_1=2.2kw						
170	123	8.37	13000	3.60	GK 67 GKF 67 GKA 67 GKAF 67	Y..100L$_1$-4 AM100 AD3
196 **274**	107 77	7.28 5.2	12700 11600	3.90 4.60	GK 67 GKF 67 GKA 67 GKAF 67	Y..100L$_1$-4 AM100 AD3
32.0 **37.0** **40.0** **47.0** **52.0** **59.0** **63.0** **74.0** **81.0**	655 565 525 445 400 350 330 285 255	44.43 38.49 35.7 30.28 27.34 24.05 22.71 19.34 17.57	5920 7900 8220 8240 8150 8020 7950 7750 7620	0.90 1.05 1.15 1.35 1.50 1.70 1.80 2.00 2.10	GK 57 GKF 57 GKA 57 GKAF 57	Y..100L$_1$-4 AM100 AD2
94.0 **108** **120** **127**	220 195 176 166	15.22 13.25 11.92 11.26	7410 7200 6880 6800	2.40 2.60 2.40 2.50	GK 57 GKF 57 GKA 57 GKAF 57	Y..100L$_1$-4 AM100 AD3
55.0 **65.0** **73.0** **84.0** **90.0** **104** **117** **121** **135** **157**	380 320 285 245 230 200 180 174 156 134	25.91 21.81 19.58 16.86 15.86 13.65 12.19 11.77 10.56 9.1	5260 5260 5240 5180 5150 5060 4980 4880 4800 4680	1.05 1.25 1.40 1.55 1.65 1.80 1.95 1.60 1.80 2.10	GK 47 GKF 47 GKA 47 GKAF 47	Y..100L$_1$-4 AM100 AD2
109 **136** **160** **179** **210** **224** **266** **358**	193 155 131 117 100 94 79 59	13.08 10.49 8.91 7.96 6.8 6.37 5.36 3.98	2370 2430 2440 2430 2410 2390 2350 2240	0.85 1.05 1.20 1.30 1.50 1.55 1.75 2.10	GK 37 GKF 37 GKA 37 GKAF 37	Y..100L$_1$-4 AM100 AD2
P_1=3.0kw						
0.52 **0.48**	48700 55200	2818 3062	190000 190000	1.05 0.90	GK 187 GRF97 GKH 187 GRF97	Y..100L$_2$-4 AM100 AD4
0.58 **0.64** **0.71** **0.80**	45200 40500 36600 32200	2519 2268 2054 1821	190000 190000 190000 190000	1.10 1.25 1.35 1.55	GK 187 GRF97 GKH 187 GRF97	Y..100L$_2$-4 AM100 AD5
0.91 **1.00** **1.20**	28600 24400 21200	1605 1395 1196	190000 190000 190000	1.75 2.00 2.40	GK 187 GRF97 GKH 187 GRF97	Y..100L$_2$-4 AM100 AD5

n_2 [1/min]	M_2 [Nm]	i	Fr [N]	K	Frame size	Input Configuration
P_1=3.0kw						
1.00	25300	1408	150000	1.25	GK 167 GRF97 GKH 167 GRF97	Y..100L$_2$-4 AM100 AD4
0.85 **1.10** **1.30** **1.50** **1.70** **1.90**	30600 23300 19500 16800 14700 13300	1704 1296 1101 944 843 757	150000 150000 150000 150000 150000 150000	1.05 1.35 1.65 1.90 2.20 2.40	GK 167 GRF97 GKH 167 GRF97	Y..100L$_2$-4 AM100 AD5
1.20 **1.30** **1.50** **1.70** **1.90** **2.60** **2.90**	21900 19500 16800 15200 13200 10000 8930	1229 1093 942 854 756 567 504	109900 111400 112700 113500 114300 115300 115600	0.80 0.90 1.05 1.20 1.35 1.80 2.00	GK 157 GRF97 GKF 157 GRF97 GKA 157 GRF97 GKAF157 GRF97	Y..100L$_2$-4 AM100 AD5
2.70 **3.10** **3.50**	9580 8410 7560	536 473 418	80900 81300 81600	1.35 1.55 1.70	GK 127 GRF87 GKF 127 GRF87 GKA 127 GRF87 GKAF127 GRF87	Y..100L$_2$-4 AM100 AD4
4.00 **4.40** **5.10**	6610 5930 5090	367 330 287	81900 82100 82300	1.95 2.20 2.60	GK 127 GRF87 GKF 127 GRF87 GKA 127 GRF87 GKAF127 GRF87	Y..100L$_2$-4 AM100 AD5
1.80	14200	790	77400	0.90	GK 127 GRF77 GKF 127 GRF77 GKA 127 GRF77 GKAF127 GRF77	Y..100L$_2$-4 AM100 AD3
2.10 **2.40** **2.60** **3.00** **3.50**	12700 11000 9960 8620 7590	704 610 549 477 418	79300 80200 80700 81200 81600	1.00 1.20 1.30 1.50 1.70	GK 127 GRF77 GKF 127 GRF77 GKA 127 GRF77 GKAF127 GRF77	Y..100L$_2$-4 AM100 AD4
3.20 **3.60**	8320 7360	461 408	65000 65000	0.95 1.10	GK 107 GRF77 GKF 107 GRF77 GKA 107 GRF77 GKAF107 GRF77	Y..100L$_2$-4 AM100 AD3
4.00 **4.60** **5.10** **5.80** **6.60** **7.40** **8.40** **9.40** **10.0**	6600 5770 5190 4550 4000 3540 3170 2800 2540	364 318 286 251 222 196 174 154 140	65000 65000 65000 65000 65000 65000 65000 65000 65000	1.20 1.40 1.55 1.75 2.00 2.20 2.30 2.60 2.80	GK 107 GRF77 GKF 107 GRF77 GKA 107 GRF77 GKAF107 GRF77	Y..100L$_2$-4 AM100 AD4
5.60 **6.30** **7.30**	4740 4270 3660	258 232 199	40000 40000 40000	0.90 1.00 1.15	GK 97 GRF57 GKF 97 GRF57 GKA 97 GRF57 GKAF 97 GRF57	Y..100L$_2$-4 AM100 AD3

n_2 [1/min]	M_2 [Nm]	i	Fr [N]	K	Frame size	Input Configuration
P_1=3.0kw						
6.70 **7.90** **8.50** **9.50**	4300 3640 3370 3020	143.47 121.46 112.41 100.75	65000 65000 65000 65000	1.85 2.20 2.40 2.60	GK 107 GKF 107 GKA 107 GKAF107	Y..132S-6 AM132 AD4
10.0 **12.0**	2820 2390	143.47 121.46	65000 65000	2.80 3.40	GK 107 GKF 107 GKA 107 GKAF107	Y..100L$_2$-4 AM100 AD4
7.70 **9.10** **9.90** **11.0**	3710 3150 2900 2590	123.93 105.13 96.8 86.52	40000 40000 40000 40000	1.15 1.35 1.50 1.65	GK 97 GKF 97 GKA 97 GKAF 97	Y..132S-6 AM132 AD3
8.30 **9.50** **10.0** **12.0** **14.0** **15.0** **17.0** **19.0** **21.0**	3460 3010 2760 2440 2070 1900 1700 1530 1380	176.05 153.21 140.28 123.93 105.13 96.8 86.52 77.89 70.54	40000 40000 40000 40000 40000 40000 40000 40000 40000	1.25 1.45 1.55 1.75 2.10 2.30 2.50 2.80 3.10	GK 97 GKF 97 GKA 97 GKAF 97	Y..100L$_2$-4 AM100 AD3
23.0 **26.0**	1230 1110	62.55 56.55	40000 40000	3.50 3.90	GK 97 GKF 97 GKA 97 GKAF 97	Y..100L$_2$-4 AM100 AD4
9.90 **11.0** **13.0** **14.0** **17.0**	2900 2490 2280 2020 1690	147.32 126.91 115.82 102.71 86.34	27000 27500 27800 28000 28300	0.95 1.10 1.20 1.35 1.60	GK 87 GKF 87 GKA 87 GKAF 87	Y..100L$_2$-4 AM100 AD2
18.0 **21.0** **23.0** **26.0** **30.0** **33.0** **40.0**	1560 1380 1240 1110 960 860 715	79.34 70.46 63.00 56.64 49.16 44.02 36.52	28400 28600 28600 28700 28800 28800 28200	1.75 1.95 2.20 2.40 2.80 3.00 3.50	GK 87 GKF 87 GKA 87 GKAF 87	Y..100L$_2$-4 AM100 AD3
16.0 **19.0** **20.0** **22.0** **25.0** **28.0**	1750 1530 1450 1270 1140 1000	88.97 78.07 73.99 64.75 58.34 51.18	13800 15500 16000 17100 17700 18300	0.90 1.00 1.05 1.20 1.35 1.55	GK 77 GKF 77 GKA 77 GKAF 77	Y..100L$_2$-4 AM100 AD2
32.0	880	45.16	18700	1.75	GK 77 GKF 77 GKA 77 GKAF 77	Y..100L$_2$-4 AM100 AD2
36.0 **41.0** **47.0**	785 690 605	40.04 35.2 30.89	19000 19300 19500	1.95 2.20 2.60	GK 77 GKF 77 GKA 77 GKAF 77	Y..100L$_2$-4 AM100 AD3

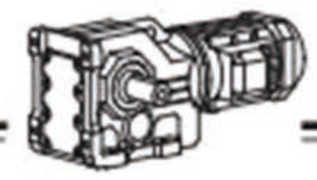

n_2 [1/min]	M_2 [Nm]	i	Fr [N]	K	Frame size	Input Configuration
P_1=3.0kw						
33.0	870	44.32	9810	0.95	GK 67 GKF 67 GKA 67 GKAF 67	Y..100L$_2$-4 AM100 AD2
38.0	755	38.39	10800	1.05		
41.0	700	35.62	11300	1.15		
48.0	590	30.22	11900	1.40	GK 67 GKF 67 GKA 67 GKAF 67	Y..100L$_2$-4 AM100 AD3
53.0	535	27.28	12200	1.55		
61.0	470	24	12500	1.70		
64.0	445	22.66	12600	1.75		
75.0	375	19.3	12900	2.00		
83.0	345	17.54	13000	2.10		
96.0	295	15.19	13000	2.30		
110	260	13.22	13000	2.60		
117	245	12.48	13000	2.20		
137	205	10.63	13000	2.40		
151	190	9.66	13000	2.50		
48.0	595	30.28	7190	1.00	GK 57 GKF 57 GKA 57 GKAF 57	Y..100L$_2$-4 AM100 AD2
53.0	535	27.34	7190	1.10		
60.0	470	24.05	7170	1.25		
64.0	445	22.71	7150	1.35		
75.0	380	19.34	7060	1.50		
83.0	345	17.57	6980	1.60		
96.0	295	15.22	6860	1.80	GK 57 GKF 57 GKA 57 GKAF 57	Y..100L$_2$-4 AM100 AD3
110	260	13.25	6710	1.95		
122	230	11.92	6380	1.75		
129	220	11.26	6330	1.85		
152	189	9.59	6160	2.20		
167	172	8.71	6050	2.30		
193	149	7.55	5870	2.50	GK 57 GKF 57 GKA 57 GKAF 57	Y..100L$_2$-4 AM100 AD3
222	129	6.57	5700	2.70		
310	92	4.69	5270	3.20		
74.0	385	19.58	4450	1.05	GK 47 GKF 47 GKA 47 GKAF 47	Y..100L$_2$-4 AM100 AD2
86.0	330	16.86	4500	1.15		
92.0	310	15.86	4510	1.2		
107	265	13.65	4500	1.35		
119	240	12.19	4480	1.45		
124	230	11.77	4360	1.20		
138	205	10.56	4340	1.35		
160	179	9.1	4280	1.55		
170	168	8.56	4250	1.60	GK 47 GKF 47 GKA 47 GKAF 47	Y..100L$_2$-4 AM100 AD3
198	145	7.36	4160	1.70		
221	130	6.58	4090	1.85		
250	114	5.81	4000	2.00		
314	91	4.64	3830	2.20		
163	176	8.91	2020	0.90	GK 37 GKF 37 GKA 37 GKAF 37	Y..100L$_2$-4 AM100 AD2
183	157	7.96	2050	1.00		
214	134	6.8	2080	1.10		
229	125	6.37	2090	1.15		
271	106	5.36	2090	1.35		
366	78	3.98	2040	1.60		

n_2 [1/min]	M_2 [Nm]	i	Fr [N]	K	Frame size	Input Configuration
P_1=4.0kw						
1.80	19500	835	190000	2.60	GK 187 GRF107 GKH 187 GRF107	Y..112M-4 AM112 AD5
2.80	12200	520	190000	4.10		
0.58	60400	2519	190000	0.85	GK 187 GRF97 GKH 187 GRF97	Y..112M-4 AM112 AD5
0.64	54200	2268	190000	0.90		
0.71	49000	2054	190000	1.00		
0.80	43300	1821	190000	1.15		
0.91	38300	1605	190000	1.30		
1.00	32800	1395	190000	1.50		
1.20	28400	1196	190000	1.75		
1.40	24800	1046	190000	2.00		
1.50	22400	945	190000	2.20		
1.00	33900	1408	150000	0.95	GK 167 GRF97 GKH 167 GRF97	Y..112M-4 AM112 AD4
1.10	31100	1296	150000	1.05	GK 167 GRF97 GKH 167 GRF97	Y..112M-4 AM112 AD5
1.30	26100	1101	150000	1.20		
1.60	22500	944	150000	1.40		
1.70	19800	843	150000	1.60		
1.90	17900	757	150000	1.80		
2.30	15000	632	150000	2.10		
1.70	20300	854	110900	0.90	GK 157 GRF97 GKF 157 GRF97 GKA 157 GRF97 GKAF157 GRF97	Y..112M-4 AM112 AD5
1.90	17800	756	112300	1.00		
2.60	13400	567	114200	1.35		
2.90	11900	504	114700	1.50		
3.40	10200	434	115200	1.75		
2.70	12800	536	79300	1.00	GK 127 GRF87 GKF 127 GRF87 GKA 127 GRF87 GKAF127 GRF87	Y..112M-4 AM112 AD4
3.10	11200	473	80100	1.15		
3.50	10100	418	80600	1.30		
4.00	8830	367	81200	1.45	GK 127 GRF87 GKF 127 GRF87 GKA 127 GRF87 GKAF127 GRF87	Y..112M-4 AM112 AD5
4.40	7930	330	81500	1.65		
5.10	6820	287	81800	1.90		
5.80	6030	253	82100	2.20		
2.40	14700	610	76500	0.90	GK 127 GRF77 GKF 127 GRF77 GKA 127 GRF77 GKAF127 GRF77	Y..112M-4 AM112 AD4
2.70	13200	549	79000	1.00		
3.10	11500	477	80000	1.15		
3.50	10100	418	80600	1.30		
4.00	8800	364	65000	0.90	GK 107 GRF77 GKF 107 GRF77 GKA 107 GRF77 GKAF107 GRF77	Y..112M-4 AM112 AD4
4.60	7690	318	65000	1.05		
5.10	6920	286	65000	1.15		
5.80	6060	251	65000	1.30		
6.60	5340	222	65000	1.50		
7.40	4730	196	65000	1.70		
8.40	4230	174	65000	1.70		
9.50	3740	154	65000	1.90		
10.0	3400	140	65000	2.10		
7.30	4880	199	40000	0.90	GK 97 GRF57 GKF 97 GRF57 GKA 97 GRF57 GKAF 97 GRF57	Y..112M-4 AM112 AD3

n_2 [1/min]	M_2 [Nm]	i	Fr [N]	K	Frame size	Input Configuration
P_1=4.0kw						
6.60	5810	146.07	82100	2.20	GK 127 GKF 127 GKA 127 GKAF127	Y..132M$_1$-6 AM132 AD4
7.00	5410	136.14	82200	2.40		
7.80	4870	122.48	82300	2.70		
8.70	4380	110.18	82400	3.00		
6.70	5700	143.47	65000	1.40	GK 107 GKF 107 GKA 107 GKAF107	Y..132M$_1$-6 AM132 AD4
7.90	4830	121.46	65000	1.65		
8.50	4470	112.41	65000	1.80		
9.50	4000	100.75	65000	2.00		
11.0	3610	90.96	65000	2.20		
10.0	3750	143.47	65000	2.10	GK 107 GKF 107 GKA 107 GKAF107	Y..112M-4 AM112 AD4
12.0	3170	121.46	65000	2.50		
13.0	2940	112.41	65000	2.70		
14.0	2630	100.75	65000	3.00		
16.0	2370	90.96	65000	3.40		
18.0	2160	82.61	65000	3.70		
20.0	1910	73.3	65000	4.20		
9.50	4000	153.21	40000	1.05	GK 97 GKF 97 GKA 97 GKAF 97	Y..112M-4 AM112 AD3
10.0	3670	140.28	40000	1.15		
12.0	3240	123.93	40000	1.35		
14.0	2750	105.13	40000	1.55		
15.0	2530	96.8	40000	1.70		
17.0	2260	86.52	40000	1.90		
19.0	2030	77.89	40000	2.10		
21.0	1840	70.54	40000	2.30		
13.0	3030	115.82	26800	0.90	GK 87 GKF 87 GKA 87 GKAF 87	Y..112M-4 AM112 AD2
14.0	2680	102.71	27300	1.00		
17.0	2250	86.34	27800	1.20		
18.0	2070	79.34	28000	1.30	GK 87 GKF 87 GKA 87 GKAF 87	Y..112M-4 AM112 AD3
21.0	1840	70.46	28200	1.45		
23.0	1640	63.00	28400	1.65		
26.0	1480	56.64	28500	1.80		
30.0	1280	49.16	28600	2.10		
33.0	1150	44.02	28200	2.30		
40.0	950	36.52	27200	2.60		
23.0	1690	64.75	14300	0.90	GK 77 GKF 77 GKA 77 GKAF 77	Y..112M-4 AM112 AD2
25.0	1520	58.34	15500	1.00		
29.0	1330	51.18	16700	1.15		
32.0	1180	45.16	17500	1.30		
36.0	1040	40.04	18100	1.50	GK 77 GKF 77 GKA 77 GKAF 77	Y..112M-4 AM112 AD3
38.0	1000	38.39	18300	1.50		
41.0	920	35.2	18600	1.70		
47.0	800	30.89	19000	1.90		
50.0	765	29.27	19100	2.00	GK 77 GKF 77 GKA 77 GKAF 77	Y..112M-4 AM112 AD4
57.0	670	25.62	19300	2.30		
63.0	600	23.08	19500	2.60		
72.0	525	20.25	19600	2.80		

n_2 [1/min]	M_2 [Nm]	i	Fr [N]	K	Frame size	Input Configuration
P_1=4.0kw						
48.0	790	30.22	10600	1.05	GK 67 GKF 67 GKA 67 GKAF 67	Y..112M-4 AM112 AD3
54.0	710	27.28	11200	1.15		
61.0	625	24	11700	1.25		
64.0	590	22.66	11900	1.30		
76.0	500	19.3	12400	1.50		
83.0	455	17.54	12600	1.60		
96.0	395	15.19	12800	1.75		
110	345	13.22	13000	1.95		
117	325	12.48	13000	1.60		
137	275	10.63	13000	1.80		
151	250	9.66	12800	1.90		
175	215	8.37	12400	2.00		
201	190	7.28	12100	2.20		
281	136	5.2	11100	2.60		
61.0	625	24.05	6140	0.95	GK 57 GKF 57 GKA 57 GKAF 57	Y..112M-4 AM112 AD2
64.0	590	22.71	6170	1.00		
76.0	505	19.34	6230	1.15		
83.0	455	17.57	6230	1.20		
96.0	395	15.22	6200	1.35	GK 57 GKF 57 GKA 57 GKAF 57	Y..112M-4 AM112 AD3
110	345	13.25	6140	1.45		
122	310	11.92	5800	1.35		
130	290	11.26	5780	1.40		
152	250	9.59	5690	1.60		
168	225	8.71	5620	1.70		
193	197	7.55	5500	1.85		
222	172	6.57	5380	2.00		
311	123	4.69	5040	2.40		
P_1=5.5kw						
0.80	60200	1821	190000	0.85	GK 187 GRF97 GKH 187 GRF97	Y..132S-4 AM132 AD5
0.91	53200	1605	190000	0.95		
1.00	45800	1395	190000	1.10		
1.20	39500	1196	190000	1.25		
1.40	34500	1046	190000	1.45	GK 187 GRF97 GKH 187 GRF97	Y..132S-4 AM132 AD5
1.50	31100	945	190000	1.60		
2.00	24300	738	190000	2.00		
2.30	20400	621	190000	2.40		
1.30	36300	1101	150000	0.90	GK 167 GRF97 GKH 167 GRF97	Y..132S-4 AM132 AD5
1.50	31200	944	150000	1.00		
1.70	27700	843	150000	1.15		
1.90	24900	757	150000	1.30		
2.30	20800	632	150000	1.55		
2.60	18300	561	150000	1.75		
3.00	15800	481	150000	2.00		
3.40	13800	423	150000	2.30		
2.20	21500	661	110200	0.85	GK 157 GRF97 GKF 157 GRF97 GKA 157 GRF97 GKAF157 GRF97	Y..132S-4 AM132 AD5
2.60	18700	567	111800	0.95		
2.90	16600	504	112800	1.10		
3.40	14200	434	113900	1.25		
3.80	12300	379	114600	1.45		
4.40	10900	333	115000	1.65		

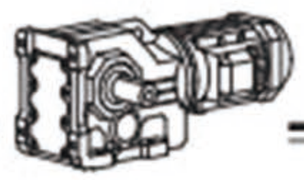

n_2 [1/min]	M_2 [Nm]	i	Fr [N]	K	Frame size	Input Configuration
P_1=5.5kw						
3.50	14000	418	77900	0.95	GK 127 GRF87 GKF 127 GRF87 GKA 127 GRF87 GKAF127 GRF87	Y..132S-4 AM132 AD4
4.00 4.40 5.10 5.70 6.80 7.30 8.80 9.90	12200 10900 9480 8380 7040 6710 5550 4900	367 330 287 253 213 200 166 147	79600 80200 80900 81300 81800 81900 82200 82300	1.05 1.20 1.35 1.55 1.85 1.80 2.20 2.40	GK 127 GRF87 GKF 127 GRF87 GKA 127 GRF87 GKAF127 GRF87	Y..132S-4 AM132 AD5
6.60 7.40 8.40 9.40 10.0	7400 6550 5860 5190 4710	222 196 174 154 140	65000 65000 65000 65000 65000	1.10 1.20 1.25 1.40 1.55	GK 107 GRF77 GKF 107 GRF77 GKA 107 GRF77 GKAF107 GRF77	Y..132S-4 AM132 AD4
7.10 7.90 8.80	7400 6660 5990	136.14 122.48 110.18	81700 81900 82100	1.75 1.95 2.20	GK 127 GKF 127 GKA 127 GKAF127	Y..132M_2-6 AM132 AD4
11.0	4890	89.89	82300	2.70	GK 127 GKF 127 GKA 127 GKAF127	Y..132M_2-6 AM132 AD5
8.60 9.60 11.0 12.0	6110 5480 4950 4490	112.41 100.75 90.96 82.61	65000 65000 65000 65000	1.30 1.45 1.60 1.80	GK 107 GKF 107 GKA 107 GKAF107	Y..132M_2-6 AM132 AD4
10.0 12.0 13.0 14.0 16.0 18.0	5170 4380 4050 3630 3280 2980	143.47 121.46 112.41 100.75 90.96 82.61	65000 65000 65000 65000 65000 65000	1.55 1.80 1.95 2.20 2.40 2.70	GK 107 GKF 107 GKA 107 GKAF107	Y..132S-4 AM132 AD4
12.0 14.0 15.0 17.0 19.0 21.0	4470 3790 3490 3120 2810 2540	123.93 105.13 96.8 86.52 77.89 70.54	40000 40000 40000 40000 40000 40000	0.95 1.15 1.25 1.40 1.55 1.70	GK 97 GKF 97 GKA 97 GKAF 97	Y..132S-4 AM132 AD3
23.0 26.0 30.0	2250 2040 1730	62.55 56.55 47.93	40000 39600 38400	1.90 2.10 2.50	GK 97 GKF 97 GKA 97 GKAF 97	Y..132S-4 AM132 AD4
17.0	3110	86.34	26700	0.85	GK 87 GKF 87 GKA 87 GKAF 87	Y..132S-4 AM132 AD2

n_2 [1/min]	M_2 [Nm]	i	Fr [N]	K	Frame size	Input Configuration
P_1=5.5kw						
18.0 21.0 23.0 26.0 30.0	2860 2540 2270 2040 1770	79.34 70.46 63.00 56.64 49.16	27100 27500 27400 27200 26800	0.95 1.05 1.20 1.30 1.50	GK 87 GKF 87 GKA 87 GKAF 87	Y..132S-4 AM132 AD3
33.0 40.0	1580 1310	44.02 36.52	26500 25800	1.65 1.90	GK 87 GKF 87 GKA 87 GKAF 87	Y..132S-4 AM132 AD3
46.0 52.0	1130 1000	31.39 27.88	25100 24600	2.40 2.60	GK 87 GKF 87 GKA 87 GKAF 87	Y..132S-4 AM132 AD4
32.0	1630	45.16	14800	0.95	GK 77 GKF 77 GKA 77 GKAF 77	Y..132S-4 AM132 AD2
36.0 47.0	1440 1110	40.04 30.89	16100 17800	1.05 1.40	GK 77 GKF 77 GKA 77 GKAF 77	Y..132S-4 AM132 AD3
50.0 57.0 63.0 72.0 81.0 92.0 108	1050 920 830 730 640 570 485	29.27 25.62 23.08 20.25 17.87 15.84 13.52	18100 18600 18900 19200 19400 19100 18500	1.45 1.70 1.85 2.00 2.20 2.40 2.80	GK 77 GKF 77 GKA 77 GKAF 77	Y..132S-4 AM132 AD4
61.0 64.0 75.0 83.0 96.0 110 117	860 810 695 630 545 475 450	24 22.66 19.3 17.54 15.19 13.22 12.48	9880 10300 11300 11700 12200 12500 12600	0.90 0.95 1.10 1.15 1.30 1.40 1.20	GK 67 GKF 67 GKA 67 GKAF 67	Y..132S-4 AM132 AD3
137 151 174 200 280	380 345 300 260 188	10.63 9.66 8.37 7.28 5.2	12400 12200 11900 11600 10800	1.30 1.40 1.45 1.60 1.85	GK 67 GKF 67 GKA 67 GKAF 67	Y..132S-4 AM132 AD3
P_1=7.5kw						
1.80	37100	835	190000	1.35	GK 187 GRF107 GKH 187 GRF107	Y..132M-4 AM132 AD5
2.00 2.40	32200 27400	729 622	190000 190000	1.55 1.80	GK 187 GRF107 GKH 187 GRF107	Y..132M-4 AM132 AD6

n_2 [1/min]	M_2 [Nm]	i	Fr [N]	K	Frame size	Input Configuration
P_1=7.5kw						
1.20	53600	1196	190000	0.95	GK 187 GRF97 GKH 187 GRF97	Y..132M-4 AM132 AD5
1.40	46800	1046	190000	1.05		
1.60	42300	945	190000	1.20		
2.00	33000	738	190000	1.50		
2.40	27700	621	190000	1.80		
2.80	23400	527	190000	2.10		
1.70	37600	843	150000	0.85	GK 167 GRF97 GKH 167 GRF97	Y..132M-4 AM132 AD5
1.90	33800	757	150000	0.95		
2.30	28300	632	150000	1.15		
2.60	24900	561	150000	1.30		
3.10	21500	481	150000	1.50		
3.50	18800	423	150000	1.70		
4.00	16400	369	150000	1.95	GK 167 GRF97 GKH 167 GRF97	Y..132M-4 AM132 AD5
3.40	19300	434	111500	0.95	GK 157 GRF97 GKF 157 GRF97 GKA 157 GRF97 GKAF157 GRF97	Y..132M-4 AM132 AD5
3.90	16800	379	112700	1.05		
4.40	14800	333	113600	1.20		
5.00	12900	291	114400	1.40		
4.40	14800	330	76200	0.85	GK 127 GRF87 GKF 127 GRF87 GKA 127 GRF87 GKAF127 GRF87	Y..132M-4 AM132 AD5
5.10	12800	287	79300	1.00		
5.80	11300	253	80000	1.15		
6.90	9550	213	80900	1.35		
7.30	9100	200	81100	1.30		
8.80	7530	166	81600	1.60		
10.0	6640	147	81900	1.80		
10.0	7110	146.07	81700	1.85	GK 127 GKF 127 GKA 127 GKAF127	Y..132M-4 AM132 AD4
11.0	6630	136.14	81900	1.95		
12.0	5960	122.48	82100	2.20		
13.0	5360	110.18	82200	2.40		
16.0	4370	89.89	82400	3.00	GK 127 GKF 127 GKA 127 GKAF127	Y..132M-4 AM132 AD5
18.0	3990	81.98	82500	3.20		
21.0	3450	70.95	82600	3.80		
10.0	6990	143.47	65000	1.15	GK 107 GKF 107 GKA 107 GKAF107	Y..132M-4 AM132 AD4
12.0	5910	121.46	65000	1.35		
13.0	5470	112.41	65000	1.45		
15.0	4900	100.75	64900	1.65		
16.0	4430	90.96	63900	1.80		
18.0	4020	82.61	62900	2.00		
20.0	3570	73.3	61600	2.20		
22.0	3240	66.52	60500	2.50		
26.0	2780	57.17	58800	2.90		
29.0	2430	49.9	57100	3.20		
35.0	2060	42.33	55100	3.60	GK 107 GKF 107 GKA 107 GKAF107	Y..132M-4 AM132 AD5
40.0	1800	37.00	53500	4.00		

n_2 [1/min]	M_2 [Nm]	i	Fr [N]	K	Frame size	Input Configuration
P_1=7.5kw						
15.0	4710	96.8	38300	0.90	GK 97 GKF 97 GKA 97 GKAF 97	Y..132M-4 AM132 AD3
17.0	4210	86.52	38300	1.00		
19.0	3790	77.89	38100	1.15		
21.0	3430	70.54	37800	1.25		
15.0	4710	96.8	38300	0.90		
17.0	4210	86.52	38300	1.00		
19.0	3790	77.89	38100	1.15		
21.0	3430	70.54	37800	1.25		
24.0	3040	62.55	37400	1.40	GK 97 GKF 97 GKA 97 GKAF 97	Y..132M-4 AM132 AD4
26.0	2750	56.55	37000	1.55		
31.0	2330	47.93	36200	1.85		
35.0	2030	41.87	35500	2.10		
38.0	1860	38.3	35000	2.30	GK 97 GKF 97 GKA 97 GKAF 97	Y..132M-4 AM132 AD5
43.0	1660	34.23	34300	2.60		
23.0	3060	63.00	24100	0.90	GK 87 GKF 87 GKA 87 GKAF 87	Y..132M-4 AM132 AD3
26.0	2750	56.64	24200	1.00		
30.0	2390	49.16	24200	1.15		
33.0	2140	44.02	24100	1.20		
40.0	1770	36.52	23800	1.40		
47.0	1520	31.39	23400	1.75	GK 87 GKF 87 GKA 87 GKAF 87	Y..132M-4 AM132 AD4
53.0	1350	27.88	23100	1.90		
59.0	1210	24.92	22700	2.10		
66.0	1090	22.41	22400	2.10		
76.0	940	19.45	21800	2.40		
84.0	840	17.42	21400	2.60		
92.0	775	16	20500	2.30		
102	700	14.45	20600	3.00		
48.0	1500	30.89	15700	1.05	GK 77 GKF 77 GKA 77 GKAF 77	Y..132M-4 AM132 AD3
50.0	1420	29.27	16200	1.10	GK 77 GKF 77 GKA 77 GKAF 77	Y..132M-4 AM132 AD4
57.0	1240	25.62	17200	1.25		
64.0	1120	23.08	17800	1.40		
73.0	980	20.25	18400	1.50		
82.0	870	17.87	18500	1.65		
93.0	770	15.84	18100	1.80		
109	655	13.52	17700	2.00		
119	600	12.36	17000	1.65		
136	525	10.84	16600	1.90		
154	465	9.56	16200	2.00		
173	410	8.48	15800	2.20		
203	350	7.24	15300	2.30		
P_1=11.0kw						
1.80	54600	835	190000	0.90	GK 187 GRF107 GKH 187 GRF107	Y..160M-4 AM160 AD5
2.80	34300	520	190000	1.45		
2.00	47500	729	190000	1.05	GK 187 GRF107 GKH 187 GRF107	Y..160M-4 AM160 AD6
2.40	40500	622	190000	1.25		

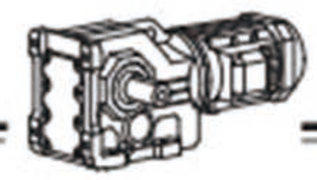

n_2 [1/min]	M_2 [Nm]	i	Fr [N]	K	Frame size	Input Configuration
P_1=11.0kw						
3.20 **4.20**	29900 23100	454 355	190000 190000	1.65 2.20	GK 187 GRF107 GKH 187 GRF107	Y..160M-4 AM160 AD6
2.00 **2.40** **2.80**	48500 40800 34500	738 621 527	190000 190000 190000	1.05 1.20 1.45	GK 187 GRF97 GKH 187 GRF97	Y..160M-4 AM160 AD5
4.60	21000	318	150000	1.50	GK 167 GRF107 GKH 167 GRF107	Y..160M-4 AM160 AD5
5.30 **6.00** **6.90** **7.20**	18200 15800 13800 13400	278 244 213 206	150000 150000 150000 150000	1.75 2.00 2.30 2.40	GK 167 GRF107 GKH 167 GRF107	Y..160M-4 AM160 AD6
2.60 **3.10** **3.50** **4.00**	36600 31600 27700 24100	561 481 423 369	150000 150000 150000 150000	0.85 1.00 1.15 1.30	GK 167 GRF97 GKH 167 GRF97	Y..160M-4 AM160 AD5
4.40 **5.10**	21800 19000	333 291	110000 111600	0.80 0.95	GK 157 GRF97 GKF 157 GRF97 GKA 157 GRF97 GKAF157 GRF97	Y..160M-4 AM160 AD5
6.90 **7.40** **8.90** **10.0**	14000 13300 11000 9760	213 200 166 147	77900 79000 80200 80800	0.95 0.90 1.10 1.25	GK 127 GRF87 GKF 127 GRF87 GKA 127 GRF87 GKAF127 GRF87	Y..160M-4 AM160 AD5
9.00	11700	164.5	150000	2.70	GK 167 GKF 167 GKA 167 GKAF167	Y..160M-4 AM160 AD5
11.0	9610	134.99	150000	3.30	GK 167 GKF 167 GKA 167 GKAF167	Y..160M-4 AM160 AD6
9.80 **12.0** **15.0** **16.0**	10700 8710 7130 6520	150.41 122.39 100.22 91.65	115100 115600 116000 116100	1.70 2.10 2.50 2.80	GK 157 GKF 157 GKA 157 GKAF157	Y..160M-4 AM160 AD5
11.0 **12.0** **13.0**	9690 8720 7840	136.14 122.48 110.18	80800 81200 81500	1.35 1.50 1.65	GK 127 GKF 127 GKA 127 GKAF127	Y..160M-4 AM160 AD4
16.0 **18.0** **21.0**	6400 5830 5050	89.89 81.98 70.95	82000 82100 82300	2.00 2.20 2.60	GK 127 GKF 127 GKA 127 GKAF127	Y..160M-4 AM160 AD5
13.0 **15.0** **16.0** **18.0**	8000 7170 6470 5880	112.41 100.75 90.96 82.61	57800 58200 57900 57400	1.00 1.10 1.25 1.35	GK 107 GKF 107 GKA 107 GKAF107	Y..160M-4 AM160 AD4

n_2 [1/min]	M_2 [Nm]	i	Fr [N]	K	Frame size	Input Configuration
P_1=11.0kw						
20.0 **22.0** **26.0** **30.0**	5210 4730 4070 3550	73.3 66.52 57.17 49.9	56700 56100 54900 53800	1.55 1.70 1.95 2.20	GK 107 GKF 107 GKA 107 GKAF107	Y..160M-4 AM160 AD4
35.0 **40.0**	3010 2630	42.33 37.00	52300 51000	2.40 2.70	GK 107 GKF 107 GKA 107 GKAF107	Y..160M-4 AM160 AD5
21.0	5020	70.54	32300	0.85	GK 97 GKF 97 GKA 97 GKAF 97	Y..160M-4 AM160 AD3
24.0 **26.0** **31.0** **35.0**	4450 4020 3410 2980	62.55 56.55 47.93 41.87	32500 32500 32400 32200	0.95 1.05 1.25 1.45	GK 97 GKF 97 GKA 97 GKAF 97	Y..160M-4 AM160 AD4
39.0 **43.0** **48.0** **53.0** **60.0** **66.0**	2720 2430 2190 1980 1760 1590	38.3 34.23 30.82 27.91 24.75 22.37	31900 31600 31200 30700 30200 29700	1.60 1.75 1.95 2.20 2.40 2.70	GK 97 GKF 97 GKA 97 GKAF 97	Y..160M-4 AM160 AD5
34.0 **40.0**	3130 2600	44.02 36.52	20100 20500	0.85 0.95	GK 87 GKF 87 GKA 87 GKAF 87	Y..160M-4 AM160 AD3
47.0 **53.0** **59.0** **66.0** **76.0** **85.0** **92.0** **102.0** **117.0** **132.0**	2230 1980 1770 1590 1380 1230 1130 1020 890 790	31.39 27.88 24.92 22.41 19.45 17.42 16 14.45 12.56 11.17	20600 20500 20400 20300 20000 19800 18800 19300 18900 17900	1.20 1.30 1.40 1.45 1.65 1.75 1.60 2.00 2.20 1.90	GK 87 GKF 87 GKA 87 GKAF 87	Y..160M-4 AM160 AD4
148 **178** **205**	710 590 510	10 8.29 7.21	17600 17000 16600	2.10 2.40 2.50	GK 87 GKF 87 GKA 87 GKAF 87	Y..160M-4 AM160 AD5
64.0 **73.0** **83.0** **93.0** **109** **119** **136** **154** **174** **204**	1640 1440 1270 1120 960 870 770 680 600 515	23.08 20.25 17.87 15.84 13.52 12.36 10.84 9.56 8.48 7.24	14700 16100 16600 16500 16200 15500 15300 15000 14800 14400	0.95 1.05 1.15 1.25 1.40 1.15 1.30 1.40 1.45 1.60	GK 77 GKF 77 GKA 77 GKAF 77	Y..160M-4 AM160 AD4

n_2 [1/min]	M_2 [Nm]	i	Fr [N]	K	Frame size	Input Configuration
P_1=15.0kw						
2.80	47400	520	190000	1.05	GK 187 GRF107 GKH 187 GRF107	Y..160L-4 AM160 AD5
2.40 **3.20** **4.10** **5.60**	55900 41200 31900 23700	622 454 355 261	190000 190000 190000 190000	0.90 1.20 1.55 2.10	GK 187 GRF107 GKH 187 GRF107	Y..160L-4 AM160 AD6
4.60	28900	318	150000	1.10	GK 167 GRF107 GKH 167 GRF107	Y..160L-4 AM160 AD5
5.30 **6.00** **6.90** **7.10** **8.10** **9.20**	25200 21800 19000 18600 16000 14500	278 244 213 206 180 160	150000 150000 150000 150000 150000 150000	1.25 1.45 1.70 1.70 2.00 2.20	GK 167 GRF107 GKH 167 GRF107	Y..160L-4 AM160 AD6
6.40 **6.90** **7.80** **9.30** **12.0** **14.0**	20500 19300 16600 14100 11000 9670	230 213 187 157 122 107	110800 111500 112800 113900 115000 115400	0.90 0.95 1.10 1.25 1.60 1.85	GK 157 GRF107 GKF 157 GRF107 GKA 157 GRF107 GKAF157 GRF107	Y..160L-4 AM160 AD6
8.90	16000	164.5	150000	2.00	GK 167 GKH 167	Y..160L-4 AM160 AD5
11.0	13100	134.99	150000	2.40	GK 167 GKH 167	Y..160L-4 AM160 AD6
9.70 **12.0** **15.0** **16.0** **18.0**	14700 11900 9790 8960 7790	150.41 122.39 100.22 91.65 79.75	113700 114700 114100 112400 109500	1.20 1.50 1.85 2.00 2.30	GK 157 GKF 157 GKA 157 GKAF157	Y..160L-4 AM160 AD5
11.0 **12.0** **13.0**	13300 11900 10700	136.14 122.48 110.18	79000 79700 80300	1.00 1.10 1.20	GK 127 GKF 127 GKA 127 GKAF127	Y..160L-4 AM160 AD4
16.0 **18.0** **21.0** **23.0** **27.0** **31.0**	8780 8010 6930 6120 5280 4670	89.89 81.98 70.95 62.6 54.07 47.82	81200 81500 81500 79900 77900 76200	1.50 1.60 1.85 2.10 2.50 2.80	GK 127 GKF 127 GKA 127 GKAF127	Y..160L-4 AM160 AD5
16.0 **18.0** **20.0** **22.0** **26.0** **29.0**	8890 8070 7160 6500 5590 4870	90.96 82.61 73.3 66.52 57.17 49.9	48200 49400 50500 51000 50600 50000	0.90 1.00 1.10 1.25 1.45 1.60	GK 107 GKF 107 GKA 107 GKAF107	Y..160L-4 AM160 AD4

n_2 [1/min]	M_2 [Nm]	i	Fr [N]	K	Frame size	Input Configuration
P_1=15.0kw						
35.0 **40.0** **45.0** **47.0**	4130 3610 3190 3050	42.33 37.00 32.69 31.28	49100 48200 47300 46900	1.80 2.00 2.20 2.20	GK 107 GKF 107 GKA 107 GKAF107	Y..160L-4 AM160 AD5
51.0	2830	29	46300	2.50	GK 107 GKF 107 GKA 107 GKAF107	Y..160L-4 AM160 AD6
31.0 **35.0**	4680 4090	47.93 41.87	28100 28400	0.90 1.05	GK 97 GKF 97 GKA 97 GKAF 97	Y..160L-4 AM160 AD4
38.0 **43.0** **48.0** **53.0**	3740 3340 3010 2720	38.3 34.23 30.82 27.91	28500 28500 28400 28200	1.15 1.30 1.45 1.60	GK 97 GKF 97 GKA 97 GKAF 97	Y..160L-4 AM160 AD5
59.0 **65.0** **77.0** **88.0**	2410 2180 1850 1610	24.75 22.37 18.96 16.56	28000 27700 27200 26600	1.80 1.95 2.30 2.70	GK 97 GKF 97 GKA 97 GKAF 97	Y..160L-4 AM160 AD5
47.0 **53.0** **59.0** **65.0** **75.0** **84.0** **92.0** **101** **117** **131**	3060 2720 2430 2190 1900 1700 1560 1410 1220 1090	31.39 27.88 24.92 22.41 19.45 17.42 16 14.45 12.56 11.17	17300 17600 17800 18000 18000 18000 16800 17800 17600 16600	0.90 0.95 1.05 1.05 1.20 1.30 1.15 1.50 1.65 1.35	GK 87 GKF 87 GKA 87 GKAF 87	Y..160L-4 AM160 AD4
147 **177** **203**	970 810 705	10 8.29 7.21	16400 16000 15700	1.55 1.75 1.85	GK 87 GKF 87 GKA 87 GKAF 87	Y..160L-4 AM160 AD5
P_1=18.5kw						
2.80	58500	520	190000	0.85	GK 187 GRF107 GKH 187 GRF107	Y..180M-4 AM180 AD5
3.20 **4.10** **5.60** **6.60**	51000 39400 29300 24800	454 355 261 221	190000 190000 190000 190000	1.00 1.25 1.70 2.00	GK 187 GRF107 GKH 187 GRF107	Y..180M-4 AM180 AD6
4.60	35800	318	150000	0.90	GK 167 GRF107 GKH 167 GRF107	Y..180M-4 AM180 AD5
5.30 **6.00** **6.90** **7.10**	31200 27000 23600 23000	278 244 213 206	150000 150000 150000 150000	1.00 1.20 1.35 1.40	GK 167 GRF107 GKH 167 GRF107	Y..180M-4 AM180 AD6

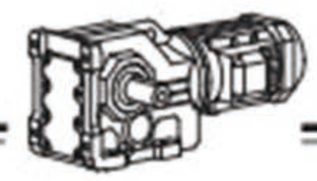

n_2 [1/min]	M_2 [Nm]	i	Fr [N]	K	Frame size	Input Configuration
P_1=18.5kw						
8.10 **9.20**	19900 17900	180 160	150000 150000	1.60 1.80	GK 167 GRF107 GKH 167 GRF107	Y..180M-4 AM180 AD6
11.0 **12.0**	15100 13200	135 118	150000 150000	2.10 2.40	GK 167 GRF107 GKH 167 GRF107	Y..180M-4 AM180 AD6
7.80 **9.30** **12.0** **14.0**	20600 17500 13700 11900	187 157 122 107	110700 112400 113900 112000	0.85 1.05 1.30 1.50	GK 157 GRF107 GKF 157 GRF107 GKA 157 GRF107 GKAF157 GRF107	Y..180M-4 AM180 AD6
8.20 **8.90** **10.0**	21600 19900 17400	179.86 165.21 144.59	190000 190000 190000	2.30 2.50 2.90	GK 187 GKH 187	Y..180M-4 AM180 AD6
11.0	15600	129.69	190000	3.20	GK 187 GKH 187	Y..180M-4 AM180 AD7
11.0 **13.0**	16200 13200	134.99 109.83	150000 150000	1.95 2.40	GK 167 GKH 167	Y..180M-4 AM180 AD6
17.0	10500	87.86	150000	3.00	GK 167 GKH 167	Y..180M-4 AM180 AD7
12.0 **15.0** **16.0** **18.0** **21.0** **24.0**	14700 12000 11000 9610 8480 7350	122.39 100.22 91.65 79.75 70.38 61.02	111600 109100 107800 105600 103400 100700	1.20 1.50 1.65 1.85 2.10 2.40	GK 157 GKF 157 GKA 157 GKAF157	Y..180M-4 AM180 AD5
27.0	6540	54.29	98500	2.80	GK 157 GKF 157 GKA 157 GKAF157	Y..180M-4 AM180 AD6
31.0 **39.0**	5640 4580	46.79 38.02	95500 91300	3.20 3.90	GK 157 GKF 157 GKA 157 GKAF157	Y..180M-4 AM180 AD7
13.0	13200	110.18	79000	1.00	GK 127 GKF 127 GKA 127 GKAF127	Y..180M-4 AM180 AD4
16.0 **18.0** **21.0** **23.0**	10800 9880 8550 7540	89.89 81.98 70.95 62.6	79000 78500 77500 76400	1.20 1.30 1.50 1.70	GK 127 GKF 127 GKA 127 GKAF127	Y..180M-4 AM180 AD5

n_2 [1/min]	M_2 [Nm]	i	Fr [N]	K	Frame size	Input Configuration
P_1=18.5kw						
27.0 **31.0**	6510 5760	54.07 47.82	74800 73400	2.00 2.20	GK 127 GKF 127 GKA 127 GKAF127	Y..180M-4 AM180 AD5
36.0	4840	40.19	71300	2.70	GK 127 GKF 127 GKA 127 GKAF127	Y..180M-4 AM180 AD6
40.0 **47.0** **53.0**	4370 3780 3330	36.25 31.37 27.68	69900 68000 66200	3.00 3.40 3.90	GK 127 GKF 127 GKA 127 GKAF127	Y..180M-4 AM180 AD7
20.0 **22.0** **26.0** **29.0**	8830 8020 6890 6010	73.3 66.52 57.17 49.9	42700 44200 45800 46600	0.90 1.00 1.15 1.30	GK 107 GKF 107 GKA 107 GKAF107	Y..180M-4 AM180 AD4
35.0 **40.0** **45.0** **47.0**	5100 4460 3940 3770	42.33 37.00 32.69 31.28	46300 45700 45100 44800	1.45 1.60 1.85 1.80	GK 107 GKF 107 GKA 107 GKAF107	Y..180M-4 AM180 AD5
51.0 **56.0** **65.0** **74.0** **88.0**	3490 3170 2720 2380 2010	29 26.32 22.62 19.74 16.75	44400 43800 42700 41700 40400	2.10 2.30 2.60 3.00 3.50	GK 107 GKF 107 GKA 107 GKAF107	Y..180M-4 AM180 AD6
35.0	5040	41.87	25100	0.85	GK 97 GKF 97 GKA 97 GKAF 97	Y..180M-4 AM180 AD4
48.0 **53.0** **59.0** **65.0**	3710 3360 2980 2690	30.82 27.91 24.75 22.37	26000 26000 26000 25900	1.15 1.30 1.45 1.60	GK 97 GKF 97 GKA 97 GKAF 97	Y..180M-4 AM180 AD5
77.0 **88.0**	2280 1990	18.96 16.56	25700 25300	1.90 2.20	GK 97 GKF 97 GKA 97 GKAF 97	Y..180M-4 AM180 AD5
106	1670	13.85	24800	2.60	GK 97 GKF 97 GKA 97 GKAF 97	Y..180M-4 AM180 AD6
59.0 **65.0** **75.0** **84.0** **101** **117** **131**	3000 2700 2340 2090 1740 1510 1340	24.92 22.41 19.45 17.42 14.45 12.56 11.17	15600 15900 16200 16400 16500 16400 15400	0.85 0.85 1.00 1.05 1.20 1.30 1.10	GK 87 GKF 87 GKA 87 GKAF 87	Y..180M-4 AM180 AD4

n_2 [1/min]	M_2 [Nm]	i	Fr [N]	K	Frame size	Input Configuration
P_1=18.5kw						
147	1200	10	15300	1.25	GK 87 GKF 87 GKA 87 GKAF 87	Y..180M-4 AM180 AD5
177	1000	8.29	15100	1.40		
203	860	7.21	14900	1.50		
P_1=22kw						
3.20	60400	454	190000	0.85	GK 187 GRF107 GKH 187 GRF107	Y..180L-4 AM180 AD6
4.20	46700	355	190000	1.05		
5.60	34700	261	190000	1.45		
6.70	29400	221	190000	1.70		
7.60	25600	193	190000	1.95		
9.00	21600	163	190000	2.30		
5.30	36900	278	150000	0.85	GK 167 GRF107 GKH 167 GRF107	Y..180L-4 AM180 AD6
6.00	32000	244	150000	1.00		
6.90	27900	213	150000	1.15		
7.20	27200	206	150000	1.15		
8.20	23500	180	150000	1.35		
9.20	21200	160	150000	1.50		
11.0	17900	135	150000	1.80		
12.0	15600	118	150000	2.00		
9.40	20700	157	109400	0.85	GK 157 GRF107 GKF 157 GRF107 GKA 157 GRF107 GKA 157 GRF107	Y..180L-4 AM180 AD6
12.0	16200	122	108100	1.10		
14.0	14100	107	106900	1.25		
8.20	25600	179.86	190000	1.95	GK 187 GKH 187	Y..180L-4 AM180 AD6
8.90	23500	165.21	190000	2.10		
10.0	20500	144.59	190000	2.40		
11.0	18400	129.69	190000	2.70	GK 187 GKH 187	Y..180L-4 AM180 AD7
11.0	19200	134.99	150000	1.65	GK 167 GKH 167	Y..180L-4 AM180 AD6
13.0	15600	109.83	150000	2.00		
17.0	12500	87.86	150000	2.60	GK 167 GKH 167	Y..180L-4 AM180 AD7
19.0	11100	78.14	150000	2.90		
12.0	17400	122.39	105500	1.05	GK 157 GKF 157 GKA 157 GKAF157	Y..180L-4 AM180 AD5
15.0	14200	100.22	104000	1.25		
16.0	13000	91.65	103200	1.40		
18.0	11300	79.75	101500	1.60		
21.0	10000	70.38	99700	1.80		
24.0	8690	61.02	97600	2.10		
27.0	7730	54.29	95700	2.30	GK 157 GKF 157 GKA 157 GKAF157	Y..180L-4 AM180 AD6
32.0	6660	46.79	93100	2.70	GK 157 GKF 157 GKA 157 GKAF157	Y..180L-4 AM180 AD7
39.0	5410	38.02	89300	3.30		

n_2 [1/min]	M_2 [Nm]	i	Fr [N]	K	Frame size	Input Configuration
P_1=22kw						
16.0	12800	89.89	73900	1.00	GK 127 GKF 127 GKA 127 GKAF127	Y..180L-4 AM180 AD5
18.0	11600	81.98	73800	1.10		
21.0	10100	70.95	73400	1.30		
24.0	8910	62.6	72700	1.45		
27.0	7700	54.07	71700	1.70		
31.0	6810	47.82	70600	1.90		
37.0	5720	40.19	68900	2.30	GK 127 GKF 127 GKA 127 GKAF127	Y..180L-4 AM180 AD6
41.0	5160	36.25	67800	2.50	GK 127 GKF 127 GKA 127 GKAF127	Y..180L-4 AM180 AD7
47.0	4460	31.37	66100	2.90		
53.0	3940	27.68	64500	3.30		
62.0	3400	23.91	62700	3.80		
70.0	3010	21.15	61100	4.30	GK 127 GKF 127 GKA 127 GKAF127	Y..180L-4 AM180 AD8
26.0	8140	57.17	39800	1.00	GK 107 GKF 107 GKA 107 GKAF107	Y..180L-4 AM180 AD4
30.0	7100	49.9	41600	1.10		
35.0	6020	42.33	42900	1.20	GK 107 GKF 107 GKA 107 GKAF107	Y..180L-4 AM180 AD5
40.0	5260	37.00	43200	1.35		
45.0	4650	32.69	42900	1.55		
47.0	4450	31.28	42700	1.55		
51.0	4120	29	42400	1.75	GK 107 GKF 107 GKA 107 GKAF107	Y..180L-4 AM180 AD6
56.0	3740	26.32	42000	1.90		
65.0	3220	22.62	41200	2.20		
75.0	2810	19.74	40400	2.60		
88.0	2380	16.75	39300	3.00	GK 107 GKF 107 GKA 107 GKAF107	Y..180L-4 AM180 AD6
101	2080	14.64	38300	3.30		
110	1910	13.43	36700	2.20		
126	1660	11.73	35800	2.60		
148	1410	9.94	34700	3.00		
48.0	4380	30.82	23500	1.00	GK 97 GKF 97 GKA 97 GKAF 97	Y..180L-4 AM180 AD5
53.0	3970	27.91	23800	1.10		
60.0	3520	24.75	24100	1.20		
66.0	3180	22.37	24200	1.35		
78.0	2700	18.96	24100	1.60		
89.0	2350	16.56	24000	1.80		
106	1970	13.85	23700	2.20	GK 97 GKF 97 GKA 97 GKAF 97	Y..180L-4 AM180 AD6
123	1700	11.99	23300	2.30		

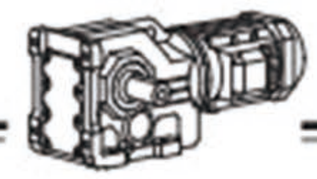

n_2 [1/min]	M_2 [Nm]	i	Fr [N]	K	Frame size	Input Configuration
P_1=22kw						
142	1480	10.41	21800	1.95	GK 97 GKF 97 GKA 97 GKAF 97	Y..180L-4 AM180 AD5
169	1240	8.71	21300	2.20	GK 97 GKF 97 GKA 97 GKAF 97	Y..180L-4 AM180 AD6
76.0 85.0 102 117 132	2760 2470 2050 1780 1580	19.45 17.42 14.45 12.56 11.17	14500 14800 15200 15300 14200	0.85 0.90 1.00 1.10 0.95	GK 87 GKF 87 GKA 87 GKAF 87	Y..180L-4 AM180 AD4
148 178 205	1420 1180 1020	10 8.29 7.21	14200 14300 14200	1.05 1.20 1.25	GK 87 GKF 87 GKA 87 GKAF 87	Y..180L-4 AM180 AD5
P_1=30kw						
5.60 6.70 7.60 9.00	47400 40200 35100 29600	261 221 193 163	190000 190000 190000 190000	1.05 1.25 1.40 1.70	GK 187 GRF107 GKH 187 GRF107	Y..200L-4 AM200 AD6
6.90 7.20 8.20 9.20 11.0 12.0	38200 37300 32300 29000 24500 21400	213 206 180 160 135 118	150000 150000 150000 150000 150000 150000	0.85 0.85 1.00 1.10 1.30 1.50	GK 167 GRF107 GKH 167 GRF107	Y..200L-4 AM200 AD6
8.20 8.90 10.0	34900 32000 28000	179.86 165.21 144.59	190000 190000 190000	1.45 1.55 1.80	GK 187 GKF 187 GKA 187 GKAF187	Y..200L-4 AM200 AD6
11.0 13.0 14.0	25100 21800 19800	129.69 112.6 102.16	190000 190000 190000	2.00 2.30 2.50	GK 187 GKF 187 GKA 187 GKAF187	Y..200L-4 AM200 AD7
17.0	17000	88	190000	2.90	GK 187 GKF 187 GKA 187 GKAF187	Y..200L-4 AM200 AD8
13.0	21300	109.83	150000	1.50	GK 167 GKF 167 GKA 167 GKAF167	Y..200L-4 AM200 AD6
17.0 19.0 22.0 24.0	17000 15100 13200 11700	87.86 78.14 68.07 60.74	150000 150000 150000 150000	1.90 2.10 2.40 2.70	GK 167 GKF 167 GKA 167 GKAF167	Y..200L-4 AM200 AD7

n_2 [1/min]	M_2 [Nm]	i	Fr [N]	K	Frame size	Input Configuration
P_1=30kw						
15.0 16.0 18.0 21.0 24.0	19400 17800 15400 13600 11800	100.22 91.65 79.75 70.38 61.02	92700 92800 92400 91800 90700	0.90 1.00 1.15 1.30 1.50	GK 157 GKF 157 GKA 157 GKAF157	Y..200L-4 AM200 AD5
27.0	10500	54.29	89500	1.70	GK 157 GKF 157 GKA 157 GKAF157	Y..200L-4 AM200 AD6
32.0 39.0	9080 7380	46.79 38.02	87800 85000	2.00 2.40	GK 157 GKF 157 GKA 157 GKAF157	Y..200L-4 AM200 AD7
47.0	6070	31.3	82100	3.00	GK 157 GKF 157 GKA 157 GKAF157	Y..200L-4 AM200 AD8
21.0 24.0 27.0 31.0	13700 12100 10500 9280	70.95 62.6 54.07 47.82	64200 64600 64700 64400	0.95 1.05 1.25 1.40	GK 127 GKF 127 GKA 127 GKAF127	Y..200L-4 AM200 AD5
37.0	7800	40.19	63700	1.65	GK 127 GKF 127 GKA 127 GKAF127	Y..200L-4 AM200 AD6
41.0 47.0 53.0 62.0	7030 6090 5370 4640	36.25 31.37 27.68 23.91	63100 62000 61000 59600	1.85 2.10 2.40 2.80	GK 127 GKF 127 GKA 127 GKAF127	Y..200L-4 AM200 AD7
35.0 40.0 47.0	8220 7180 6070	42.33 37.00 31.28	32500 34700 36600	0.90 1.00 1.10	GK 107 GKF 107 GKA 107 GKAF107	Y..200L-4 AM200 AD5
51.0 56.0 65.0 75.0 88.0 101 110 126 148 170	5630 5100 4390 3830 3250 2840 2600 2270 1930 1680	29 26.32 22.62 19.74 16.75 14.64 13.43 11.73 9.94 8.69	37200 37700 37700 37400 36700 36100 34400 33800 32900 32200	1.30 1.40 1.65 1.90 2.20 2.40 1.65 1.90 2.20 2.40	GK 107 GKF 107 GKA 107 GKAF107	Y..200L-4 AM200 AD6
60.0 66.0 78.0 89.0	4800 4340 3680 3210	24.75 22.37 18.96 16.56	19600 20100 20700 21000	0.90 1.00 1.15 1.35	GK 97 GKF 97 GKA 97 GKAF 97	Y..200L-4 AM200 AD5

n_2 [1/min]	M_2 [Nm]	i	Fr [N]	K	Frame size	Input Configuration
P_1=30kw						
106 123	2690 2320	13.85 11.99	21200 21100	1.60 1.65	GK 97 GKF 97 GKA 97 GKAF 97	Y..200L-4 AM200 AD6
142	2020	10.41	19500	1.40	GK 97 GKF 97 GKA 97 GKAF 97	Y..200L-4 AM200 AD5
169	1690	8.71	19400	1.55	GK 97 GKF 97 GKA 97 GKAF 97	Y..200L-4 AM200 AD6
P_1=37kw						
5.70 6.70 7.60 9.00	58500 49600 43300 36500	261 221 193 163	190000 190000 190000 190000	0.85 1.00 1.15 1.35	GK 187 GRF107 GKH 187 GRF107	Y..225S-4 AM225 AD6
8.20 9.20 11.0 12.0	39800 35800 30300 26400	180 160 135 118	150000 150000 150000 150000	0.80 0.90 1.05 1.20	GK 167 GRF107 GKH 167 GRF107	Y..225S-4 AM225 AD6
8.20 8.90 10.0	43000 39500 34500	179.86 165.21 144.59	190000 190000 190000	1.15 1.25 1.45	GK 187 GKH 187	Y..225S-4 AM225 AD6
11.0 13.0 14.0	31000 26900 24400	129.69 112.6 102.16	190000 190000 190000	1.60 1.85 2.00	GK 187 GKH 187	Y..225S-4 AM225 AD7
17.0	21000	88	190000	2.40	GK 187 GKH 187	Y..225S-4 AM225 AD8
13.0	26200	109.83	150000	1.20	GK 167 GKH 167	Y..225S-4 AM225 AD6
17.0 19.0 22.0 24.0	21000 18600 16200 14500	87.86 78.14 68.07 60.74	150000 150000 150000 150000	1.50 1.70 1.95 2.20	GK 167 GKH 167	Y..225S-4 AM225 AD7
29.0	12300	51.77	150000	2.60	GK 167 GKH 167	Y..225S-4 AM225 AD8
16.0 19.0 21.0 24.0	21900 19000 16800 14500	91.65 79.75 70.38 61.02	83700 84500 84800 84600	0.80 0.95 1.05 1.25	GK 157 GKF 157 GKA 157 GKAF157	Y..225S-4 AM225 AD5

n_2 [1/min]	M_2 [Nm]	i	Fr [N]	K	Frame size	Input Configuration
P_1=37kw						
27.0	12900	54.29	84100	1.40	GK 157 GKF 157 GKA 157 GKAF157	Y..225S-4 AM225 AD6
32.0 39.0	11100 9090	46.79 38.02	83100 81200	1.60 2.00	GK 157 GKF 157 GKA 157 GKAF157	Y..225S-4 AM225 AD7
47.0	7480	31.3	79000	2.40	GK 157 GKF 157 GKA 157 GKAF157	Y..225S-4 AM225 AD8
24.0 27.0 31.0	14900 12900 11400	62.6 54.07 47.82	57500 58500 59000	0.85 1.00 1.15	GK 127 GKF 127 GKA 127 GKAF127	Y..225S-4 AM225 AD5
37.0	9610	40.19	59100	1.35	GK 127 GKF 127 GKA 127 GKAF127	Y..225S-4 AM225 AD6
41.0 47.0 53.0 62.0	8660 7500 6620 5710	36.25 31.37 27.68 23.91	58900 58400 57800 56900	1.50 1.75 1.95 2.30	GK 127 GKF 127 GKA 127 GKAF127	Y..225S-4 AM225 AD7
70.0 83.0 103 116 137 170	5050 4250 3430 3050 2560 2070	21.15 17.77 14.35 12.79 10.74 8.68	55900 54500 52500 50200 48600 46500	2.60 3.10 3.50 2.80 3.10 3.50	GK 127 GKF 127 GKA 127 GKAF127	Y..225S-4 AM225 AD8
40.0 47.0	8850 7480	37.00 31.28	25900 29700	0.80 0.90	GK 107 GKF 107 GKA 107 GKAF107	Y..225S-4 AM225 AD5
51.0 56.0 65.0 75.0 88.0 101 110 126 149 170	6930 6290 5400 4720 4000 3500 3210 2800 2370 2070	29 26.32 22.62 19.74 16.75 14.64 13.43 11.73 9.94 8.69	31000 32300 33700 34400 34500 34100 32300 31900 31400 30900	1.05 1.15 1.35 1.50 1.75 1.95 1.35 1.55 1.75 1.95	GK 107 GKF 107 GKA 107 GKAF107	Y..225S-4 AM225 AD6
P_1=45kw						
6.70 7.60 9.00	60300 52700 44500	221 193 163	190000 190000 190000	0.85 0.95 1.10	GK 187 GRF107 GKH 187 GRF107	Y..225M-4 AM225 AD6

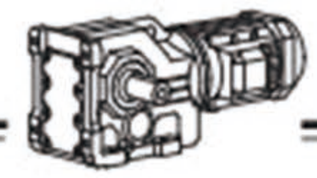

n_2 [1/min]	M_2 [Nm]	i	Fr [N]	K	Frame size	Input Configuration
P_1=45kw						
11.0	36900	135	150000	0.85	GK 167 GRF107	Y..225M-4
12.0	32200	118	150000	1.00	GKH 167 GRF107	AM225
						AD6
8.20	52200	179.86	190000	0.95	GK 187	Y..225M-4
9.00	48000	165.21	190000	1.05	GKH 187	AM225
10.0	42000	144.59	190000	1.20		AD6
11.0	37700	129.69	190000	1.35	GK 187	Y..225M-4
13.0	32700	112.6	190000	1.55	GKH 187	AM225
14.0	29700	102.16	190000	1.70		AD7
17.0	25500	88	190000	1.95	GK 187	Y..225M-4
20.0	21500	73.96	187500	2.30	GKH 187	AM225
						AD8
13.0	31900	109.83	150000	1.00	GK 167	Y..225M-4
					GKH 167	AM225
						AD6
17.0	25500	87.86	150000	1.25	GK 167	Y..225M-4
19.0	22700	78.14	150000	1.40	GKH 167	AM225
22.0	19700	68.07	150000	1.60		AD7
24.0	17600	60.74	148900	1.80		
29.0	15000	51.77	145200	2.10	GK 167	Y..225M-4
34.0	12400	42.89	140500	2.60	GKH 167	AM225
						AD8
21.0	20400	70.38	76800	0.90	GK 157	Y..225M-4
24.0	17700	61.02	77700	1.00	GKF 157	AM225
					GKA 157	AD5
					GKAF157	
27.0	15700	54.29	77900	1.15	GK 157	Y..225M-4
					GKF 157	AM225
					GKA 157	AD6
					GKAF157	
32.0	13600	46.79	77800	1.30	GK 157	Y..225M-4
39.0	11000	38.02	76900	1.65	GKF 157	AM225
					GKA 157	AD7
					GKAF157	
47.0	9100	31.3	75500	2.00	GK 157	Y..225M-4
54.0	8030	27.62	74300	2.20	GKF 157	AM225
62.0	6960	23.95	72800	2.60	GKA 157	AD8
69.0	6190	21.31	71400	2.90	GKAF157	
80.0	5330	18.37	69600	3.40		
31.0	13900	47.82	52800	0.95	GK 127	Y..225M-4
					GKF 127	AM225
					GKA 127	AD5
					GKAF127	
37.0	11600	40.19	53900	1.10	GK 127	Y..225M-4
					GKF 127	AM225
					GKA 127	AD6
					GKAF127	

n_2 [1/min]	M_2 [Nm]	i	Fr [N]	K	Frame size	Input Configuration
P_1=45kw						
41.0	10500	36.25	54200	1.25	GK 127	Y..225M-4
47.0	9110	31.37	54400	1.45	GKF 127	AM225
53.0	8040	27.68	54200	1.60	GKA 127	AD7
62.0	6940	23.91	53800	1.85	GKAF127	
70.0	6140	21.15	53200	2.10	GK 127	Y..225M-4
83.0	5160	17.77	52200	2.50	GKF 127	AM225
103	4170	14.35	50600	2.90	GKA 127	AD8
116	3710	12.79	48300	2.30	GKAF127	
138	3120	10.74	47000	2.60		
170	2520	8.68	45200	2.90		
51.0	8420	29	22900	0.85	GK 107	Y..225M-4
56.0	7640	26.32	25300	0.95	GKF 107	AM225
65.0	6570	22.62	28100	1.10	GKA 107	AD6
75.0	5730	19.74	29800	1.25	GKAF107	
88.0	4860	16.75	31100	1.45		
101	4250	14.64	31700	1.60		
110	3900	13.43	29900	1.10		
126	3400	11.73	29900	1.25		
149	2890	9.94	29600	1.45		
170	2520	8.69	29300	1.60		
P_1=55kw						
10.0	51400	144.59	190000	0.95	GK 187	Y..250M-4
					GKH 187	AM250
						AD6
11.0	46100	129.69	190000	1.10	GK 187	Y..250M-4
13.0	40000	112.6	188600	1.25	GKH 187	AM250
14.0	36300	102.16	187100	1.35		AD7
17.0	31300	88	184200	1.60	GK 187	Y..250M-4
20.0	26300	73.96	180200	1.90	GKH 187	AM250
23.0	22800	64.04	176300	2.20		AD8
17.0	31200	87.86	145300	1.00	GK 167	Y..250M-4
19.0	27800	78.14	144600	1.15	GKH 167	AM250
22.0	24200	68.07	143300	1.30		AD7
24.0	21600	60.74	141700	1.50		
28.0	18400	51.77	139100	1.75	GK 167	Y..250M-4
34.0	15200	42.89	135400	2.10	GKH 167	AM250
40.0	13000	36.61	131900	2.40		AD8
24.0	21700	61.02	69000	0.85	GK 157	Y..250M-4
					GKF 157	AM250
					GKA 157	AD5
					GKAF157	
27.0	19300	54.29	70200	0.95	GK 157	Y..250M-4
					GKF 157	AM250
					GKA 157	AD6
					GKAF157	
32.0	16600	46.79	71200	1.10	GK 157	Y..250M-4
39.0	13500	38.02	71500	1.35	GKF 157	AM250
					GKA 157	AD7
					GKAF157	

n_2 [1/min]	M_2 [Nm]	i	Fr [N]	K	Frame size	Input Configuration
P_1=55kw						
47.0	11100	31.3	71000	1.60	GK 157 GKF 157 GKA 157 GKAF157	Y..250M-4 AM250 AD8
53.0	9830	27.62	70400	1.85		
62.0	8520	23.95	69400	2.10		
69.0	7580	21.31	68400	2.40		
80.0	6530	18.37	67000	2.80		
99.0	5310	14.92	64800	3.40		
117	4500	12.65	62900	3.80		
37.0	14300	40.19	47400	0.90	GK 127 GKF 127 GKA 127 GKAF127	Y..250M-4 AM250 AD6
47.0	11100	31.37	49300	1.15	GK 127 GKF 127 GKA 127 GKAF127	Y..250M-4 AM250 AD7
53.0	9850	27.68	49700	1.30		
62.0	8510	23.91	49900	1.55		
70.0	7520	21.15	49800	1.75	GK 127 GKF 127 GKA 127 GKAF127	Y..250M-4 AM250 AD8
83.0	6320	17.77	49300	2.00		
103	5100	14.35	48300	2.40		
115	4550	12.79	45900	1.85		
137	3820	10.74	45000	2.10		
170	3080	8.68	43600	2.30		
P_1=75kw						
11.0	62700	129.69	164100	0.80	GK 187 GKH 187	Y..280S-4 AM280 AD7
13.0	54400	112.6	166100	0.90		
14.0	49400	102.16	166600	1.00		
17.0	42500	88	166600	1.15	GK 187 GKH 187	Y..280S-4 AM280 AD8
20.0	35700	73.96	165300	1.40		
23.0	30900	64.04	163400	1.60		
28.0	25800	53.36	160100	1.95		
33.0	22000	45.5	156700	2.30		
19.0	37800	78.14	126200	0.85	GK 167 GKH 167	Y..280S-4 AM280 AD7
22.0	32900	68.07	127200	0.95		
24.0	29300	60.74	127300	1.10		
29.0	25000	51.77	126800	1.30	GK 167 GKH 167	Y..280S-4 AM280 AD8
34.0	20700	42.89	125200	1.55		
40.0	17700	36.61	123200	1.80		
46.0	15600	32.25	121300	2.00		
51.0	13900	28.77	119300	2.30		
60.0	11800	24.52	116300	2.70		
39.0	18300	38.02	60800	1.00	GK 157 GKF 157 GKA 157 GKAF157	Y..280S-4 AM280 AD7
47.0	15100	31.3	62200	1.20	GK 157 GKF 157 GKA 157 GKAF157	Y..280S-4 AM280 AD8
54.0	13300	27.62	62600	1.35		
62.0	11500	23.95	62600	1.55		
69.0	10300	21.31	62400	1.75		
81.0	8880	18.37	61800	2.00		
99.0	7220	14.92	60500	2.50		
117	6120	12.65	59300	2.80		

n_2 [1/min]	M_2 [Nm]	i	Fr [N]	K	Frame size	Input Configuration
P_1=75kw						
47.0	15100	31.37	37900	0.85	GK 127 GKF 127 GKA 127 GKAF127	Y..280S-4 AM280 AD7
53.0	13300	27.68	40800	0.95		
62.0	11500	23.91	42200	1.10		
70.0	10200	21.15	42900	1.25	GK 127 GKF 127 GKA 127 GKAF127	Y..280S-4 AM280 AD8
83.0	8590	17.77	43600	1.50		
103	6940	14.35	43700	1.75		
116	6180	12.79	41100	1.40		
138	5190	10.74	41000	1.55		
171	4190	8.68	40400	1.70		
P_1=90kw						
14.0	59300	102.16	151300	0.85	GK 187 GKH 187	Y..280M-4 AM280 AD7
17.0	51100	88	153400	1.00	GK 187 GKH 187	Y..280M-4 AM280 AD8
20.0	42900	73.96	154200	1.15		
23.0	37100	64.04	153800	1.35		
28.0	30900	53.36	152200	1.60		
33.0	26400	45.50	149900	1.90		
35.0	24600	42.51	148700	2.00		
38.0	22300	38.57	146900	2.20		
22.0	39500	68.07	115100	0.80	GK 167 GKH 167	Y..280M-4 AM280 AD7
24.0	35200	60.74	116600	0.90		
29.0	30000	51.77	117600	1.05	GK 167 GKH 167	Y..280M-4 AM280 AD8
34.0	24900	42.89	117600	1.30		
40.0	21200	36.61	116700	1.50		
46.0	18700	32.25	115500	1.70		
51.0	16700	28.77	114200	1.90		
60.0	14200	24.52	111900	2.20		
73.0	11700	20.32	108800	2.70		
85.0	10000	17.34	106000	3.20		
39.0	22000	38.02	52700	0.80	GK 157 GKF 157 GKA 157 GKAF157	Y..280M-4 AM280 AD7
62.0	13900	23.95	57500	1.30	GK 157 GKF 157 GKA 157 GKAF157	Y..280M-4 AM280 AD8
69.0	12300	21.31	57900	1.45		
81.0	10600	18.37	57900	1.70		
99.0	8660	14.92	57400	2.10		
117	6120	12.65	59300	2.80		
62.0	13800	23.91	35400	0.95	GK 127 GKF 127 GKA 127 GKAF127	Y..280M-4 AM280 AD7
70.0	12200	21.15	37800	1.05	GK 127 GKF 127 GKA 127 GKAF127	Y..280M-4 AM280 AD8
83.0	10300	17.77	39200	1.25		
103	8330	14.35	40200	1.45		
116	7420	12.79	37600	1.15		
138	6230	10.74	38000	1.30		
171	5030	8.68	38000	1.45		

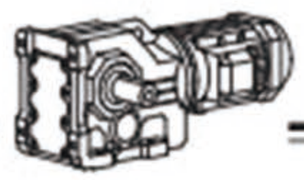

n_2 [1/min]	M_2 [Nm]	i	Fr [N]	K	Frame size	Input Configuration
P_1=110kw						
17.0	62300	88	135900	0.80	GK 187 GKH 187	Y..315S-4 - AD8
20.0	52300	73.96	139500	0.95		
23.0	45300	64.04	141000	1.10		
28.0	37700	53.36	141500	1.30		
33.0	32200	45.50	140800	1.55		
35.0	30100	42.51	140200	1.65		
38.0	27300	38.57	139100	1.85		
45.0	23500	33.23	137100	2.10		
53.0	19700	27.92	134100	2.50		
29.0	36600	51.77	105400	0.85	GK 167 GKH 167	Y..315S-4 - AD8
35.0	30300	42.89	107500	1.05		
41.0	25900	36.61	108100	1.25		
46.0	22800	32.25	107900	1.40		
52.0	20300	28.77	107400	1.55		
60.0	17300	24.52	106100	1.85		
73.0	14300	20.32	104000	2.20		
86.0	12200	17.34	101800	2.60		
62.0	16900	23.95	50800	1.05	GK 157 GKF 157 GKA 157 GKAF157	Y..315S-4 - AD8
70.0	15000	21.31	51800	1.20		
81.0	13000	18.37	52700	1.40		
99.0	10500	14.92	53100	1.70		
117	8960	12.65	53000	1.90		
P_1=132kw						
20.0	62700	73.96	123300	0.80	GK 187 GKH 187	Y..315M-4 - AD8
23.0	54300	64.04	127000	0.90		
28.0	45200	53.36	129800	1.10		
33.0	38600	45.5	130800	1.30	GK 187 GKH 187	Y..315M-4 - AD8
35.0	36000	42.51	130900	1.40		
38.0	32700	38.57	130700	1.55		
45.0	28200	33.23	129800	1.75		
53.0	23700	27.92	127900	2.10		
61.0	20500	24.18	125900	2.30		
74.0	17100	20.15	122800	2.60		
86.0	14500	17.18	119700	2.80		
35.0	36400	42.89	96400	0.90	GK 167 GKH 167	Y..315M-4 - AD8
41.0	31000	36.61	98600	1.05		
46.0	27300	32.25	99600	1.15		
52.0	24400	28.77	99900	1.30		
61.0	20800	24.52	99800	1.55		
73.0	17200	20.32	98700	1.85		
86.0	14700	17.34	97300	2.20		

n_2 [1/min]	M_2 [Nm]	i	Fr [N]	K	Frame size	Input Configuration
P_1=132kw						
62.0	20300	23.95	43400	0.90	GK 157 GKF 157 GKA 157 GKAF157	Y..315M-4 - AD8
70.0	18000	21.31	45300	1.00		
81.0	15500	18.37	47000	1.15		
100	12600	14.92	48500	1.40		
117	10700	12.65	49100	1.60		
P_1=160kw						
28.0	54900	53.36	114900	0.90	GK 187 GKH 187	Y..315L_1-4 - AD8
33.0	46800	45.50	118100	1.05		
45.0	34200	33.23	120500	1.45	GK 187 GKH 187	Y..315L_1-4 - AD8
53.0	28700	27.92	120100	1.75		
61.0	24800	24.18	119100	1.90		
74.0	20700	20.15	117200	2.10		
86.0	17600	17.18	114900	2.30		
41.0	37600	36.61	86500	0.85	GK 167 GKH 167	Y..315L_1-4 - AD8
61.0	25200	24.52	91700	1.25		
73.0	20900	20.32	92000	1.55		
86.0	17800	17.34	91600	1.80		
81.0	18900	18.37	39800	0.95	GK 157 GKF 157 GKA 157 GKAF157	Y..315M-4 - AD8
99.0	15300	14.92	42600	1.15		
117	13000	12.65	44100	1.30		
P_1=200kw						
33.0	58600	45.50	100000	0.85	GK 187 GKH 187	Y..315L_2-4 - AD8
45.0	42800	33.23	107300	1.15		
53.0	35900	27.92	109000	1.40		
61.0	31100	24.18	109500	1.55		
74.0	25900	20.15	109200	1.70		
86.0	22100	17.18	108100	1.85		
60.0	31600	24.52	80100	1.00	GK 167 GKH 167	Y..315L_2-4 - AD8
73.0	26100	20.32	82400	1.20		
85.0	22300	17.34	83400	1.45		
99.0	19200	14.92	34200	0.95	GK 157 GKF 157 GKA 157 GKAF157	Y..315L_2-4 - AD8
117	16300	12.65	36900	1.05		

4. 8 GK../GRF..性能参数 / GK../GRF.. Performance Parameters

n_2 [1/min]	i	Fr [N]	Frame size	Motor
M_{2max}=200Nm				
0.20	6832	5640		
0.23	5922	5640		
0.25	5491	5640		
0.29	4759	5640		
0.33	4160	5640		
0.38	3645	5640		
0.43	3205	5640		
0.49	2801	5640		
0.56	2454	5640		
0.64	2166	5640		
0.73	1891	5640	GK 37 GRF17	Y..63M1-4
0.83	1660	5640	GKF 37 GRF17	Y..63M1-4
0.94	1466	5640	GKA 37 GRF17	Y..63M1-4
1.10	1288	5640	GKAF 37 GRF17	Y..63M1-4
1.20	1136	5640		
1.40	996	5640		
1.60	876	5640		
1.80	761	5640		
2.10	671	5640		
2.40	585	5640		
2.70	512	5640		
3.10	451	5640		
3.50	396	5640		
4.00	346	5640		
4.50	304	5640		
4.90	267	5640	GK 37 GRF17	Y..63M2-4
5.60	234	5640	GKF 37 GRF17	Y..63M2-4
6.40	205	5640	GKA 37 GRF17	Y..63M2-4
7.30	181	5640	GKAF 37 GRF17	Y..63M2-4
8.10	160	5640	GK 37 GRF17	Y..71M1-4
9.50	136	5640	GKF 37 GRF17	Y..71M1-4
10.0	127	5640	GKA 37 GRF17	Y..71M1-4
			GKAF 37 GRF17	Y..71M1-4
12.0	110	5640	GK 37 GRF17	Y..71M2-4
14.0	96	5640	GKF 37 GRF17	Y..71M2-4
			GKA 37 GRF17	Y..71M2-4
			GKAF 37 GRF17	Y..71M2-4
M_{2max}=400Nm				
0.14	10138	5920		
0.16	8534	5920		
0.18	7662	5920		
0.20	6826	5920		
0.23	5983	5920		
0.27	5159	5920	GK 47 GRF37	Y..63M1-4
0.30	4601	5920	GKF 47 GRF37	Y..63M1-4
0.35	3940	5920	GKA 47 GRF37	Y..63M1-4
0.40	3477	5920	GKAF 47 GRF37	Y..63M1-4
0.45	3043	5920		
0.51	2733	5920		
0.59	2354	5920		
0.67	2063	5920		
0.76	1819	5920		

n_2 [1/min]	i	Fr [N]	Frame size	Motor
M_{2max}=400Nm				
0.87	1586	5920		
0.99	1388	5920		
1.10	1222	5920	GK 47 GRF37	Y..63M1-4
1.30	1097	5920	GKF 47 GRF37	Y..63M1-4
1.50	945	5920	GKA 47 GRF37	Y..63M1-4
1.70	831	5920	GKAF 47 GRF37	Y..63M1-4
1.90	718	5920		
2.20	639	5920		
2.40	552	5920	GK 47 GRF37	Y..63M2-4
2.70	495	5920	GKF 47 GRF37	Y..63M2-4
3.10	426	5920	GKA 47 GRF37	Y..63M2-4
3.50	375	5920	GKAF 47 GRF37	Y..63M2-4
4.00	327	5920	GK 47 GRF37	Y..71M1-4
4.50	289	5920	GKF 47 GRF37	Y..71M1-4
5.10	256	5920	GKA 47 GRF37	Y..71M1-4
			GKAF 47 GRF37	Y..71M1-4
			GK 47 GRF37	Y..71M2-4
6.20	225	5920	GKF 47 GRF37	Y..71M2-4
7.00	198	5920	GKA 47 GRF37	Y..71M2-4
			GKAF 47 GRF37	Y..71M2-4
8.10	171	5920	GK 47 GRF37	Y..80M1-4
9.00	153	5920	GKF 47 GRF37	Y..80M1-4
11.00	131	5920	GKA 47 GRF37	Y..80M1-4
			GKAF 47 GRF37	Y..80M1-4
M_{2max}=600Nm				
0.11	12169	7630		
0.12	11162	7630		
0.15	9503	7630		
0.16	8547	7630		
0.19	7277	7630		
0.21	6478	7630		
0.24	5662	7630		
0.27	5033	7630		
0.32	4340	7630	GK 57 GRF37	Y..63M1-4
0.36	3854	7630	GKF 57 GRF37	Y..63M1-4
0.41	3390	7630	GKA 57 GRF37	Y..63M1-4
0.47	2924	7630	GKAF 57 GRF37	Y..63M1-4
0.53	2593	7630		
0.61	2249	7630		
0.70	1986	7630		
0.79	1743	7630		
0.90	1539	7630		
1.00	1354	7630		
1.20	1174	7630		
1.30	1036	7630		
1.50	906	7630		
1.60	806	7630	GK 57 GRF37	Y..63M2-4
1.90	699	7630	GKF 57 GRF37	Y..63M2-4
2.20	615	7630	GKA 57 GRF37	Y..63M2-4
			GKAF 57 GRF37	Y..63M2-4

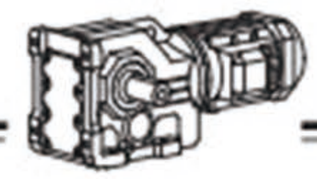

n_2 [1/min]	i	Fr [N]	Frame size	Motor
M_{2max}=600Nm				
2.40	544	7630	GK 57 GRF37	Y..71M1-4
2.80	473	7630	GKF 57 GRF37	Y..71M1-4
3.10	421	7630	GKA 57 GRF37	Y..71M1-4
			GKAF 57 GRF37	Y..71M1-4
3.80	362	7630	GK 57 GRF37	Y..71M2-4
4.30	319	7630	GKF 57 GRF37	Y..71M2-4
4.90	280	7630	GKA 57 GRF37	Y..71M2-4
			GKAF 57 GRF37	Y..71M2-4
5.60	246	7630	GK 57 GRF37	Y..80M1-4
6.40	215	7630	GKF 57 GRF37	Y..80M1-4
7.20	192	7630	GKA 57 GRF37	Y..80M1-4
			GKAF 57 GRF37	Y..80M1-4
8.60	166	7630	GK 57 GRF37	Y..80M2-4
9.90	145	7630	GKF 57 GRF37	Y..80M2-4
			GKA 57 GRF37	Y..80M2-4
			GKAF 57 GRF37	Y..80M2-4
11.0	129	7630	GK 57 GRF37	Y..90S-4
13.0	111	7630	GKF 57 GRF37	Y..90S-4
15.0	97	7630	GKA 57 GRF37	Y..90S-4
			GKAF 57 GRF37	Y..90S-4
M_{2max}=820Nm				
0.11	12139	10300		
0.12	11134	10300		
0.15	9479	10300		
0.17	8173	10300		
0.19	7259	10300		
0.21	6462	10300		
0.24	5648	10300	GK 67 GRF37	Y..63M1-4
0.28	4846	10300	GKF 67 GRF37	Y..63M1-4
0.32	4329	10300	GKA 67 GRF37	Y..63M1-4
0.37	3750	10300	GKAF 67 GRF37	Y..63M1-4
0.42	3315	10300		
0.47	2917	10300		
0.55	2532	10300		
0.62	2244	10300		
0.70	1981	10300		
0.79	1739	10300	GK 67 GRF37	Y..63M1-4
0.90	1535	10300	GKF 67 GRF37	Y..63M1-4
1.00	1351	10300	GKA 67 GRF37	Y..63M1-4
1.20	1171	10300	GKAF 67 GRF37	Y..63M1-4
1.30	1034	10300	GK 67 GRF37	Y..63M2-4
1.50	903	10300	GKF 67 GRF37	Y..63M2-4
1.70	793	10300	GKA 67 GRF37	Y..63M2-4
			GKAF 67 GRF37	Y..63M2-4
1.90	697	10300	GK 67 GRF37	Y..71M1-4
2.10	613	10300	GKF 67 GRF37	Y..71M1-4
2.40	542	10300	GKA 67 GRF37	Y..71M1-4
			GKAF 67 GRF37	Y..71M1-4

n_2 [1/min]	i	Fr [N]	Frame size	Motor
M_{2max}=820Nm				
2.90	471	10300	GK 67 GRF37	Y..71M2-4
3.30	420	10300	GKF 67 GRF37	Y..71M2-4
3.80	361	10300	GKA 67 GRF37	Y..71M2-4
			GKAF 67 GRF37	Y..71M2-4
4.30	323	10300	GK 67 GRF37	Y..80M1-4
5.00	279	10300	GKF 67 GRF37	Y..80M1-4
5.60	246	10300	GKA 67 GRF37	Y..80M1-4
			GKAF 67 GRF37	Y..80M1-4
			GK 67 GRF37	Y..80M2-4
6.60	217	10300	GKF 67 GRF37	Y..80M2-4
7.50	191	10300	GKA 67 GRF37	Y..80M2-4
			GKAF 67 GRF37	Y..80M2-4
M_{2max}=1550Nm				
0.09	15310	15400		
0.10	14043	15400		
0.12	11955	15400		
0.14	10217	15400	GK 77 GRF37	Y..63M1-4
0.16	8809	15400	GKF 77 GRF37	Y..63M1-4
0.18	7528	15400	GKA 77 GRF37	Y..63M1-4
0.21	6606	15400	GKAF 77 GRF37	Y..63M1-4
0.24	5774	15400		
0.27	5089	15400		
0.31	4489	15400	GK 77 GRF37	Y..63M1-4
0.35	3961	15400	GKF 77 GRF37	Y..63M1-4
0.40	3485	15400	GKA 77 GRF37	Y..63M1-4
0.48	2901	15400	GKAF 77 GRF37	Y..63M1-4
0.51	2717	15400		
0.56	2370	15400	GK 77 GRF37	Y..63M2-4
0.64	2050	15400	GKF 77 GRF37	Y..63M2-4
0.75	1772	15400	GKA 77 GRF37	Y..63M2-4
0.87	1514	15400	GKAF 77 GRF37	Y..63M2-4
0.95	1388	15400		
			GK 77 GRF37	Y..71M1-4
1.10	1218	15400	GKF 77 GRF37	Y..71M1-4
1.20	1053	15400	GKA 77 GRF37	Y..71M1-4
			GKAF 77 GRF37	Y..71M1-4
1.50	924	15400	GK 77 GRF37	Y..71M2-4
1.70	815	15400	GKF 77 GRF37	Y..71M2-4
2.00	709	15400	GKA 77 GRF37	Y..71M2-4
			GKAF 77 GRF37	Y..71M2-4
2.20	622	15400	GK 77 GRF37	Y..80M1-4
2.50	552	15400	GKF 77 GRF37	Y..80M1-4
2.80	485	15400	GKA 77 GRF37	Y..80M1-4
			GKAF 77 GRF37	Y..80M1-4
			GK 77 GRF37	Y..80M2-4
3.40	428	15400	GKF 77 GRF37	Y..80M2-4
3.90	367	15400	GKA 77 GRF37	Y..80M2-4
			GKAF 77 GRF37	Y..80M2-4

n_2 [1/min]	i	Fr [N]	Frame size	Motor
M_{2max}=2700Nm				
4.30	328	15400	GK 77 GRF37	Y..90S-4
4.90	290	15400	GKF 77 GRF37	Y..90S-4
5.60	252	15400	GKA 77 GRF37	Y..90S-4
			GKAF 77 GRF37	Y..90S-4
0.09	14829	27300		
0.10	13168	27300		
0.12	11737	27300		
0.14	10217	27300	GK 87 GRF57	Y..63M1-4
0.15	9073	27300	GKF 87 GRF57	Y..63M1-4
0.18	7854	27300	GKA 87 GRF57	Y..63M1-4
0.20	6832	27300	GKAF 87 GRF57	Y..63M1-4
0.23	5930	27300		
0.26	5240	27300		
0.30	4562	27300		
0.33	4037	27300	GK 87 GRF57	Y..63M2-4
0.37	3609	27300	GKF 87 GRF57	Y..63M2-4
0.42	3107	27300	GKA 87 GRF57	Y..63M2-4
0.48	2728	27300	GKAF 87 GRF57	Y..63M2-4
0.55	2371	27300	GK 87 GRF57	Y..71M1-4
0.62	2088	27300	GKF 87 GRF57	Y..71M1-4
0.70	1854	27300	GKA 87 GRF57	Y..71M1-4
			GKAF 87 GRF57	Y..71M1-4
0.83	1657	27300	GK 87 GRF57	Y..71M2-4
0.97	1415	27300	GKF 87 GRF57	Y..71M2-4
1.10	1229	27300	GKA 87 GRF57	Y..71M2-4
			GKAF 87 GRF57	Y..71M2-4
1.30	1078	27300	GK 87 GRF57	Y..80M1-4
1.40	951	27300	GKF 87 GRF57	Y..80M1-4
1.60	837	27300	GKA 87 GRF57	Y..80M1-4
			GKAF 87 GRF57	Y..80M1-4
2.00	726	27300	GK 87 GRF57	Y..80M2-4
2.20	638	27300	GKF 87 GRF57	Y..80M2-4
			GKA 87 GRF57	Y..80M2-4
			GKAF 87 GRF57	Y..80M2-4
2.50	562	27300	GK 87 GRF57	Y..90S-4
3.00	474	27300	GKF 87 GRF57	Y..90S-4
3.30	426	27300	GKA 87 GRF57	Y..90S-4
			GKAF 87 GRF57	Y..90S-4
3.80	373	27300	GK 87 GRF57	Y..90L-4
4.30	330	27300	GKF 87 GRF57	Y..90L-4
4.90	294	27300	GKA 87 GRF57	Y..90L-4
			GKAF 87 GRF57	Y..90L-4
5.70	250	27300	GK 87 GRF57	Y..100L1-4
6.00	236	27300	GKF 87 GRF57	Y..100L1-4
7.10	201	27300	GKA 87 GRF57	Y..100L1-4
			GKAF 87 GRF57	Y..100L1-4

n_2 [1/min]	i	Fr [N]	Frame size	Motor
M_{2max}=4300Nm				
0.08	18091	40000	GK 97 GRF57	Y..63M1-4
0.08	16666	40000	GKF 97 GRF57	Y..63M1-4
0.09	14897	40000	GKA 97 GRF57	Y..63M1-4
0.10	13182	40000	GKAF 97 GRF57	Y..63M1-4
0.12	11677	40000		
0.13	10317	40000	GK 97 GRF57	Y..63M1-4
0.15	9083	40000	GKF 97 GRF57	Y..63M1-4
0.17	8054	40000	GKA 97 GRF57	Y..63M1-4
0.20	6970	40000	GKAF 97 GRF57	Y..63M1-4
0.22	6027	40000	GK 97 GRF57	Y..63M2-4
0.24	5391	40000	GKF 97 GRF57	Y..63M2-4
0.28	4669	40000	GKA 97 GRF57	Y..63M2-4
0.32	4082	40000	GKAF 97 GRF57	Y..63M2-4
0.36	3583	40000	GK 97 GRF57	Y..71M1-4
0.42	3108	40000	GKF 97 GRF57	Y..71M1-4
0.47	2757	40000	GKA 97 GRF57	Y..71M1-4
			GKAF 97 GRF57	Y..71M1-4
0.57	2419	40000	GK 97 GRF57	Y..71M2-4
0.65	2123	40000	GKF 97 GRF57	Y..71M2-4
			GKA 97 GRF57	Y..71M2-4
			GKAF 97 GRF57	Y..71M2-4
0.74	1856	40000	GK 97 GRF57	Y..80M1-4
0.85	1625	40000	GKF 97 GRF57	Y..80M1-4
0.96	1430	40000	GKA 97 GRF57	Y..80M1-4
1.10	1261	40000	GKAF 97 GRF57	Y..80M1-4
1.30	1102	40000	GK 97 GRF57	Y..80M2-4
1.50	957	40000	GKF 97 GRF57	Y..80M2-4
			GKA 97 GRF57	Y..80M2-4
			GKAF 97 GRF57	Y..80M2-4
1.70	855	40000	GK 97 GRF57	Y..90S-4
1.90	743	40000	GKF 97 GRF57	Y..90S-4
2.20	652	40000	GKA 97 GRF57	Y..90S-4
			GKAF 97 GRF57	Y..90S-4
2.50	573	40000	GK 97 GRF57	Y..90L-4
2.80	504	40000	GKF 97 GRF57	Y..90L-4
			GKA 97 GRF57	Y..90L-4
			GKAF 97 GRF57	Y..90L-4
3.30	437	40000	GK 97 GRF57	Y..100L1-4
3.70	382	40000	GKF 97 GRF57	Y..100L1-4
4.20	342	40000	GKA 97 GRF57	Y..100L1-4
			GKAF 97 GRF57	Y..100L1-4
4.80	305	40000	GK 97 GRF57	Y..100L2-4
5.60	258	40000	GKF 97 GRF57	Y..100L2-4
			GKA 97 GRF57	Y..100L2-4
			GKAF 97 GRF57	Y..100L2-4
6.30	232	40000	GK 97 GRF57	Y..112M-4
7.30	199	40000	GKF 97 GRF57	Y..112M-4
			GKA 97 GRF57	Y..112M-4
			GKAF 97 GRF57	Y..112M-4

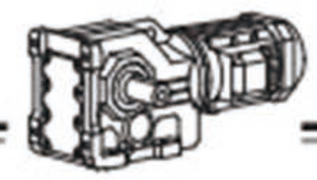

n_2 [1/min]	i	Fr [N]	Frame size	Motor
M_{2max}=8000Nm				
0.10	14311	65000	GK 107 GRF77 GKF 107 GRF77 GKA 107 GRF77 GKAF107 GRF77	Y..63M$_1$-4 Y..63M$_1$-4 Y..63M$_1$-4 Y..63M$_1$-4
0.11 0.12 0.14 0.16	12211 10677 9524 8328	65000 65000 65000 65000	GK 107 GRF77 GKF 107 GRF77 GKA 107 GRF77 GKAF107 GRF77	Y..63M$_2$-4 Y..63M$_2$-4 Y..63M$_2$-4 Y..63M$_2$-4
0.18 0.21 0.23	7270 6184 5662	65000 65000 65000	GK 107 GRF77 GKF 107 GRF77 GKA 107 GRF77 GKAF107 GRF77	Y..71M$_1$-4 Y..71M$_1$-4 Y..71M$_1$-4 Y..71M$_1$-4
0.27 0.32 0.36	5138 4359 3810	65000 65000 65000	GK 107 GRF77 GKF 107 GRF77 GKA 107 GRF77 GKAF107 GRF77	Y..71M$_2$-4 Y..71M$_2$-4 Y..71M$_2$-4 Y..71M$_2$-4
0.41 0.46 0.53	3358 2977 2599	65000 65000 65000	GK 107 GRF77 GKF 107 GRF77 GKA 107 GRF77 GKAF107 GRF77	Y..80M$_1$-4 Y..80M$_1$-4 Y..80M$_1$-4 Y..80M$_1$-4
0.63 0.74	2286 1939	65000 65000	GK 107 GRF77 GKF 107 GRF77 GKA 107 GRF77 GKAF107 GRF77	Y..80M$_2$-4 Y..80M$_2$-4 Y..80M$_2$-4 Y..80M$_2$-4
0.83 0.91 1.10	1713 1554 1336	65000 65000 65000	GK 107 GRF77 GKF 107 GRF77 GKA 107 GRF77 GKAF107 GRF77	Y..90S-4 Y..90S-4 Y..90S-4 Y..90S-4
1.20 1.40 1.60	1166 1030 904	65000 65000 65000	GK 107 GRF77 GKF 107 GRF77 GKA 107 GRF77 GKAF107 GRF77	Y..90L-4 Y..90L-4 Y..90L-4 Y..90L-4
1.80 2.00 2.30	793 696 615	65000 65000 65000	GK 107 GRF77 GKF 107 GRF77 GKA 107 GRF77 GKAF107 GRF77	Y..100L$_1$-4 Y..100L$_1$-4 Y..100L$_1$-4 Y..100L$_1$-4
2.80 3.20	522 461	65000 65000	GK 107 GRF77 GKF 107 GRF77 GKA 107 GRF77 GKAF107 GRF77	Y..100L$_2$-4 Y..100L$_2$-4 Y..100L$_2$-4 Y..100L$_2$-4
3.60 4.00	408 364	65000 65000	GK 107 GRF77 GKF 107 GRF77 GKA 107 GRF77 GKAF107 GRF77	Y..112M-4 Y..112M-4 Y..112M-4 Y..112M-4
4.60 5.10 5.80	318 286 251	65000 65000 65000	GK 107 GRF77 GKF 107 GRF77 GKA 107 GRF77 GKAF107 GRF77	Y..132S-4 Y..132S-4 Y..132S-4 Y..132S-4

n_2 [1/min]	i	Fr [N]	Frame size	Motor
M_{2max}=13000Nm				
0.08 0.08 0.09 0.11	17550 16006 14975 12440	79200 79200 79200 79200	GK 127 GRF77 GKF 127 GRF77 GKA 127 GRF77 GKAF127 GRF77	Y..63M$_2$-4 Y..63M$_2$-4 Y..63M$_2$-4 Y..63M$_2$-4
0.12 0.13 0.15	10915 9819 8443	79200 79200 79200	GK 127 GRF77 GKF 127 GRF77 GKA 127 GRF77 GKAF127 GRF77	Y..71M$_1$-4 Y..71M$_1$-4 Y..71M$_1$-4 Y..71M$_1$-4
0.18 0.21	7482 6565	79200 79200	GK 127 GRF77 GKF 127 GRF77 GKA 127 GRF77 GKAF127 GRF77	Y..71M$_2$-4 Y..71M$_2$-4 Y..71M$_2$-4 Y..71M$_2$-4
0.24 0.27 0.31	5804 5027 4423	79200 79200 79200	GK 127 GRF77 GKF 127 GRF77 GKA 127 GRF77 GKAF127 GRF77	Y..80M$_1$-4 Y..80M$_1$-4 Y..80M$_1$-4 Y..80M$_1$-4
0.37 0.43 0.48	3889 3311 3009	79200 79200 79200	GK 127 GRF77 GKF 127 GRF77 GKA 127 GRF77 GKAF127 GRF77	Y..80M$_2$-4 Y..80M$_2$-4 Y..80M$_2$-4 Y..80M$_2$-4
0.54 0.63	2607 2268	79200 79200	GK 127 GRF77 GKF 127 GRF77 GKA 127 GRF77 GKAF127 GRF77	Y..90S-4 Y..90S-4 Y..90S-4 Y..90S-4
0.74 0.81 0.93	1926 1757 1541	79200 79200 79200	GK 127 GRF77 GKF 127 GRF77 GKA 127 GRF77 GKAF127 GRF77	Y..90L-4 Y..90L-4 Y..90L-4 Y..90L-4
1.10 1.20 1.40	1342 1177 1025	79200 79200 79200	GK 127 GRF77 GKF 127 GRF77 GKA 127 GRF77 GKAF127 GRF77	Y..100L$_1$-4 Y..100L$_1$-4 Y..100L$_1$-4 Y..100L$_1$-4
1.60 1.80	899 790	79200 79200	GK 127 GRF77 GKF 127 GRF77 GKA 127 GRF77 GKAF127 GRF77	Y..100L$_2$-4 Y..100L$_2$-4 Y..100L$_2$-4 Y..100L$_2$-4
2.10 2.40 2.70	704 610 549	79200 79200 79200	GK 127 GRF77 GKF 127 GRF77 GKA 127 GRF77 GKAF127 GRF77	Y..112M-4 Y..112M-4 Y..112M-4 Y..112M-4
3.00 3.50	477 418	79200 79200	GK 127 GRF77 GKF 127 GRF77 GKA 127 GRF77 GKAF127 GRF77	Y..132S-4 Y..132S-4 Y..132S-4 Y..132S-4
2.70 3.10 3.50	536 473 418	79200 79200 79200	GK 127 GRF77 GKF 127 GRF77 GKA 127 GRF77 GKAF127 GRF77	Y..132S-4 Y..132S-4 Y..132S-4 Y..132S-4

n_2 [1/min]	i	Fr [N]	Frame size	Motor
M_{2max}=13000Nm				
4.00	367	79200	GK 127 GRF87	Y..132M-4
			GKF 127 GRF87	Y..132M-4
4.40	330	79200	GKA 127 GRF87	Y..132M-4
			GKAF127 GRF87	Y..132M-4
M_{2max}=18000Nm				
0.08	17679	112200		
0.09	15729	112200		
0.09	14721	112200	GK 157 GRF97	Y..80M$_1$-4
0.11	13097	112200	GKF 157 GRF97	Y..80M$_1$-4
0.12	11368	112200	GKA 157 GRF97	Y..80M$_1$-4
0.14	10114	112200	GKAF157 GRF97	Y..80M$_1$-4
0.16	8718	112200		
0.18	7734	112200		
0.28	5074	112200	GK 157 GRF97	Y..80M$_2$-4
			GKF 157 GRF97	Y..80M$_2$-4
0.32	4514	112200	GKA 157 GRF97	Y..80M$_2$-4
			GKAF157 GRF97	Y..80M$_2$-4
0.36	3979	112200	GK 157 GRF97	Y..90S-4
			GKF 157 GRF97	Y..90S-4
0.40	3516	112200	GKA 157 GRF97	Y..90S-4
0.47	3051	112200	GKAF157 GRF97	Y..90S-4
0.55	2610	112200	GK 157 GRF97	Y..90L-4
			GKF 157 GRF97	Y..90L-4
0.62	2322	112200	GKA 157 GRF97	Y..90L-4
			GKAF157 GRF97	Y..90L-4
0.72	2029	112200	GK 157 GRF97	Y..100L$_1$-4
0.79	1805	112200	GKF 157 GRF97	Y..100L$_1$-4
0.86	1659	112200	GKA 157 GRF97	Y..100L$_1$-4
1.00	1365	112200	GKAF157 GRF97	Y..100L$_1$-4
1.20	1229	112200	GK 157 GRF97	Y..100L$_2$-4
			GKF 157 GRF97	Y..100L$_2$-4
1.30	1093	112200	GKA 157 GRF97	Y..100L$_2$-4
			GKAF157 GRF97	Y..100L$_2$-4
1.60	942	112200	GK 157 GRF97	Y..112M-4
			GKF 157 GRF97	Y..112M-4
1.70	854	112200	GKA 157 GRF97	Y..112M-4
			GKAF157 GRF97	Y..112M-4
1.90	756	112200	GK 157 GRF97	Y..132S-4
			GKF 157 GRF97	Y..132S-4
2.20	661	112200	GKA 157 GRF97	Y..132S-4
2.60	567	112200	GKAF157 GRF97	Y..132S-4
2.90	504	112200	GK 157 GRF97	Y..132M-4
			GKF 157 GRF97	Y..132M-4
3.40	434	112200	GKA 157 GRF97	Y..132M-4
			GKAF157 GRF97	Y..132M-4
5.10	291	112200	GK 157 GRF97	Y..160M-4
			GKF 157 GRF97	Y..160M-4
4.50	325	112200	GKA 157 GRF97	Y..160M-4
4.90	299	112200	GKAF157 GRF97	Y..160M-4

n_2 [1/min]	i	Fr [N]	Frame size	Motor
M_{2max}=18000Nm				
5.80	253	112200	GK 157 GRF97	Y..160L-4
			GKF 157 GRF97	Y..160L-4
6.40	230	112200	GKA 157 GRF97	Y..160L-4
6.90	213	112200	GKAF157 GRF97	Y..160L-4
M_{2max}=32000Nm				
0.07	19723	150000		
0.08	17406	150000		Y..80M$_1$-4
0.09	15000	150000	GK 167 GRF97	Y..80M$_1$-4
0.10	13238	150000	GKH 167 GRF97	Y..80M$_1$-4
0.12	11573	150000		Y..80M$_1$-4
0.13	10264	150000		
0.17	8628	150000		Y..80M$_2$-4
			GK 167 GRF97	Y..80M$_2$-4
			GKH 167 GRF97	Y..80M$_2$-4
				Y..80M$_2$-4
0.22	6562	150000	GK 167 GRF97	Y..90S-4
0.27	5355	150000	GKH 167 GRF97	Y..90S-4
0.30	4788	150000	GK 167 GRF97	Y..90L-4
0.35	4079	150000	GKH 167 GRF97	Y..90L-4
0.42	3376	150000	GK 167 GRF97	Y..100L$_1$-4
0.52	2755	150000	GKH 167 GRF97	Y..100L$_1$-4
0.64	2263	15000	GK 167 GRF97	Y..100L$_2$-4
0.67	2182	15000	GKH 167 GRF97	Y..100L$_2$-4
0.86	1704	15000	GK 167 GRF97	Y..112M-4
1.00	1408	15000	GKH 167 GRF97	Y..112M-4
1.10	1296	15000	GK 167 GRF97	Y..132S-4
1.30	1101	15000	GKH 167 GRF97	Y..132S-4
1.60	944	15000	GK 167 GRF97	Y..132M-4
1.70	843	15000	GKH 167 GRF97	Y..132M-4
1.90	757	15000		
2.60	561	15000	GK 167 GRF97	Y..160M-4
			GKH 167 GRF97	Y..160M-4
3.00	481	15000	GK 167 GRF97	Y..160L-4
3.50	423	15000	GKH 167 GRF97	Y..160L-4
4.00	369	15000		
4.60	318	15000	GK 167 GRF107	Y..180M-4
			GKH 167 GRF107	Y..180M-4
5.30	278	15000	GK 167 GRF107	Y..180L-4
6.00	244	15000	GKH 167 GRF107	Y..180L-4
6.90	213	15000	GK 167 GRF107	Y..200L-4
7.20	206	15000	GKH 167 GRF107	Y..200L-4
8.20	180	15000		

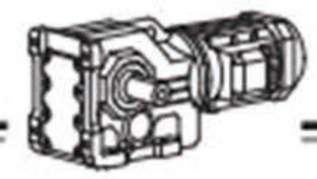

n_2 [1/min]	i	Fr [N]	Frame size	Motor
M_{2max}=32000Nm				
9.20	160	15000	GK 167 GRF107 GKH 167 GRF107	Y..225S-4 Y..225S-4
11.0 12.0	135 118	15000 15000	GK 167 GRF107 GKH 167 GRF107	Y..250M-4 Y..250M-4
M_{2max}=50000Nm				
0.04 0.05 0.06 0.07 0.08	32625 27165 24353 19144 16978	19000 19000 19000 19000 19000	GK 187 GRF97 GKH 187 GRF97	Y..80M$_1$-4 Y..80M$_1$-4
0.10 0.11	14272 13116	19000 19000	GK 187 GRF97 GKH 187 GRF97	Y..80M$_2$-4 Y..80M$_2$-4
0.12 0.14 0.15 0.17	11647 10413 9363 8126	19000 19000 19000 19000	GK 187 GRF97 GKH 187 GRF97	Y..90S-4 Y..90S-4
0.19 0.21 0.24	7343 6747 5991	19000 19000 19000	GK 187 GRF97 GKH 187 GRF97	Y..90L-4 Y..90L-4
0.27 0.30 0.33	5358 4817 4370	19000 19000 19000	GK 187 GRF97 GKH 187 GRF97	Y..100L$_1$-4 Y..100L$_1$-4
0.40 0.48	3609 3062	19000 19000	GK 187 GRF97 GKH 187 GRF97	Y..100L$_2$-4 Y..100L$_2$-4

n_2 [1/min]	i	Fr [N]	Frame size	Motor
M_{2max}=50000Nm				
0.58 0.64	2519 2268	19000 19000	GK 187 GRF97 GKH 187 GRF97	Y..112M-4 Y..112M-4
0.71 0.80 0.91	2054 1821 1605	19000 19000 19000	GK 187 GRF97 GKH 187 GRF97	Y..132S-4 Y..132S-4
1.00 1.20	1395 1196	19000 19000	GK 187 GRF97 GKH 187 GRF97	Y..132M-4 Y..132M-4
2.00 2.40	738 621	19000 19000	GK 187 GRF97 GKH 187 GRF97	Y..160L-4 Y..160L-4
2.80	527	19000	GK 187 GRF97 GKH 187 GRF97	Y..180M-4 Y..180M-4
1.80	835	19000	GK 187 GRF107 GKH 187 GRF107	Y..160M-4 Y..160M-4
2.00 2.40	729 622	19000 19000	GK 187 GRF97 GKH 187 GRF97	Y..160L-4 Y..160L-4
2.80 3.20	520 454	19000 19000	GK 187 GRF97 GKH 187 GRF97	Y..180M-4 Y..180M-4
4.20	355	19000	GK 187 GRF97 GKH 187 GRF97	Y..200L-4 Y..200L-4
5.70	261	19000	GK 187 GRF97 GKH 187 GRF97	Y..225S-4 Y..225S-4
6.70 7.60	221 193	19000 19000	GK 187 GRF97 GKH 187 GRF97	Y..225M-4 Y..225M-4

4.9 外形尺寸 / Dimensions

GK37

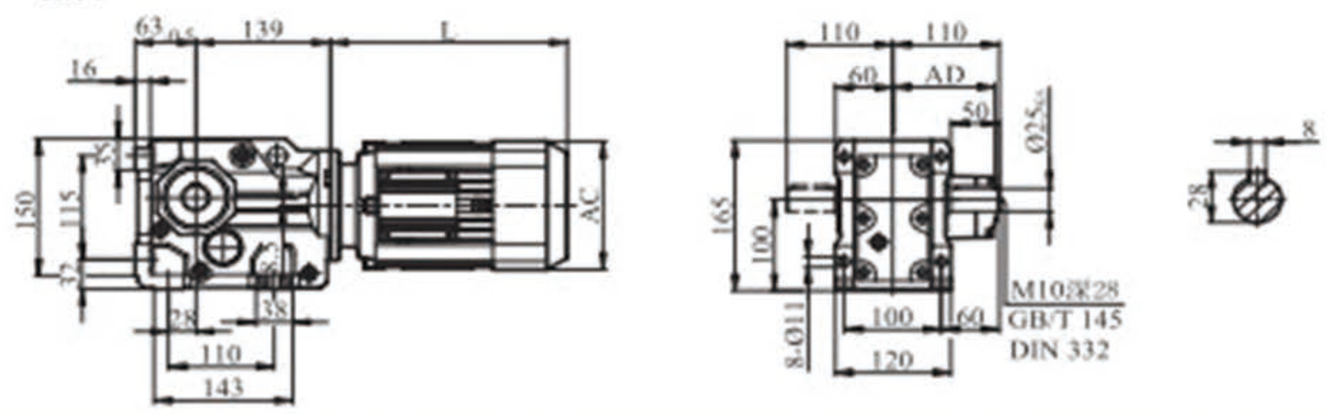

GKA/CKH/GKV37

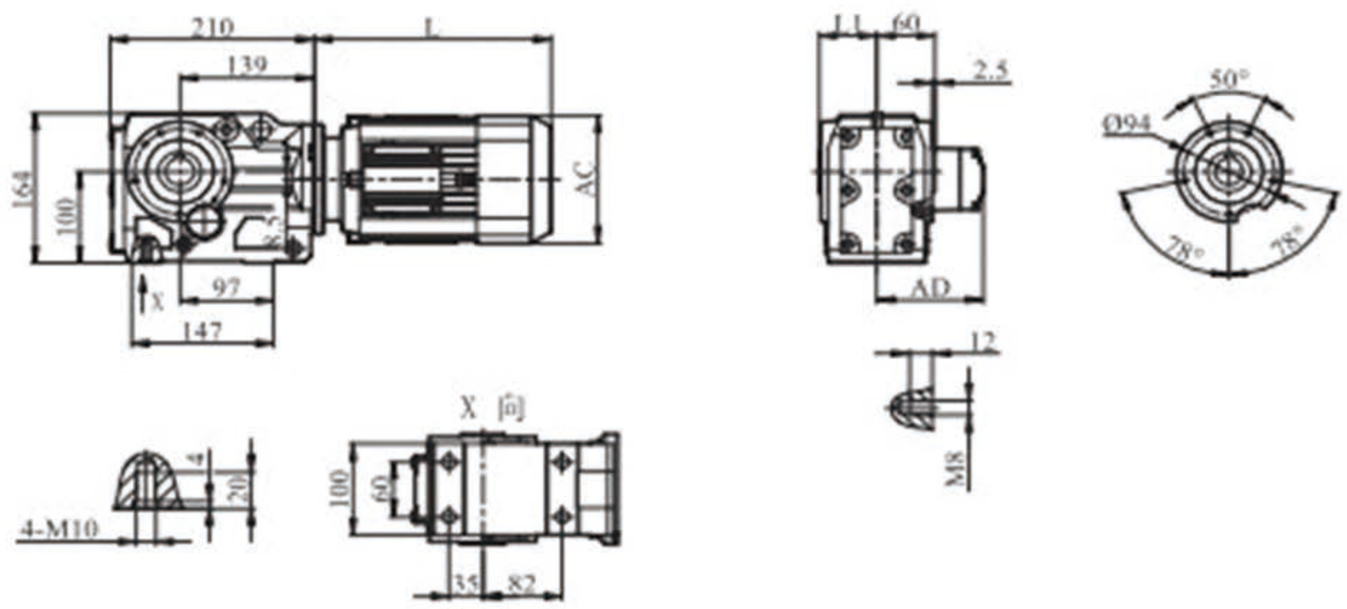

GKAZ/GKHZ/GKVZ37

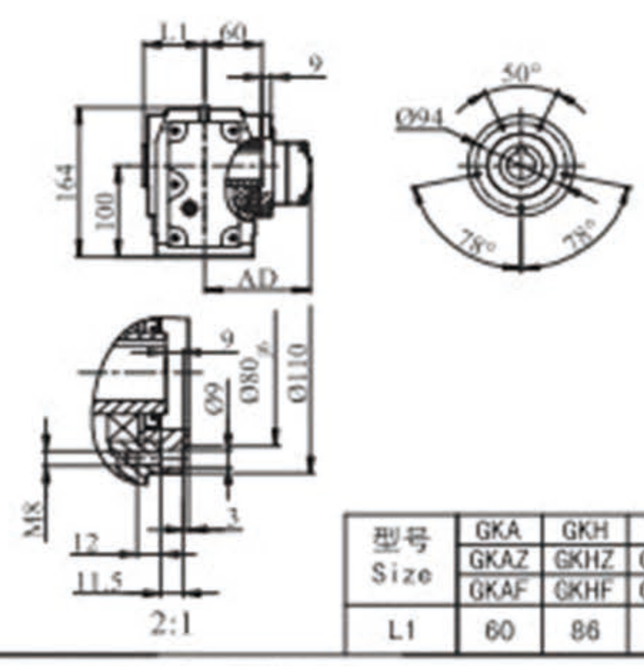

型号 Size	GKA	GKH	GKV
	GKAZ	GKHZ	GKVZ
	GKAF	GKHF	GKVF
L1	60	86	60

GKF37

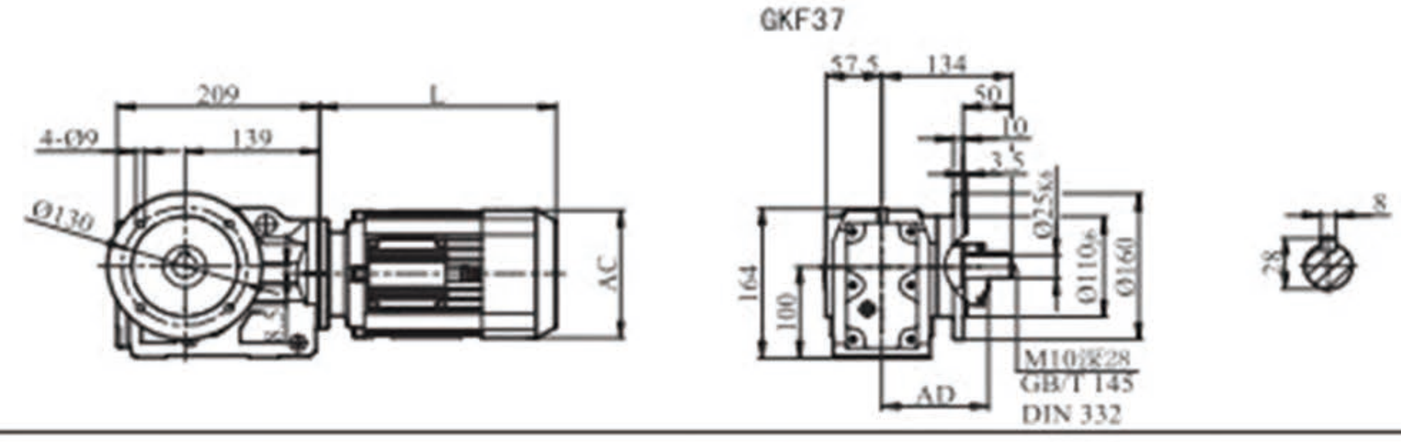

GKAF/GKHF/GKVH37

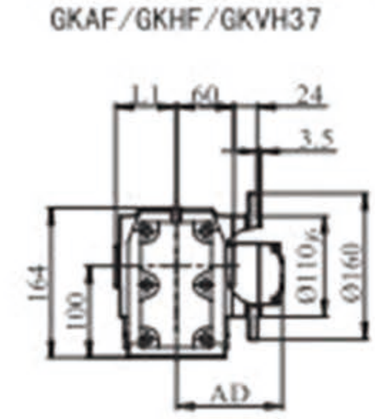

GKA37T

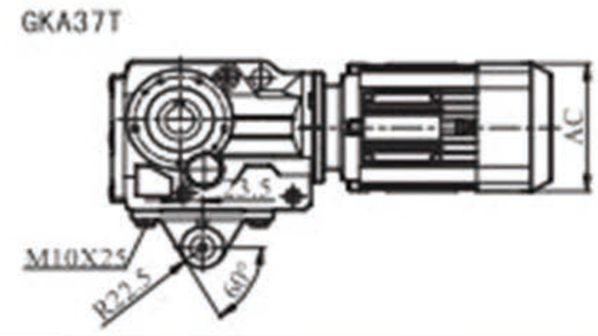

TA

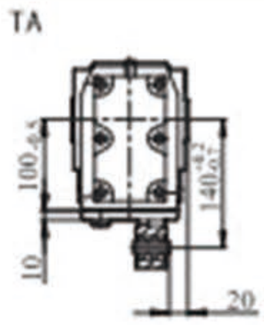

TB

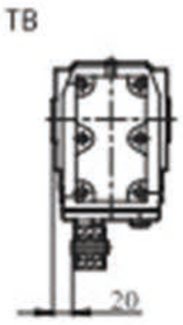

GKA/GKAZ/GKAF37输出轴

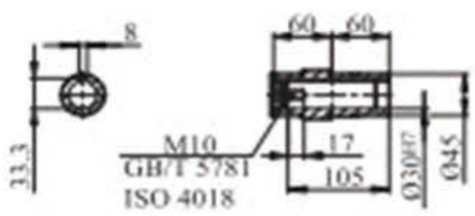

GKH/GKHZ/GKHF37输出轴

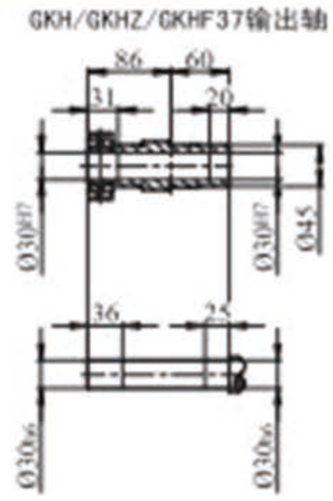

GKV/GKVZ/GKVF37输出轴

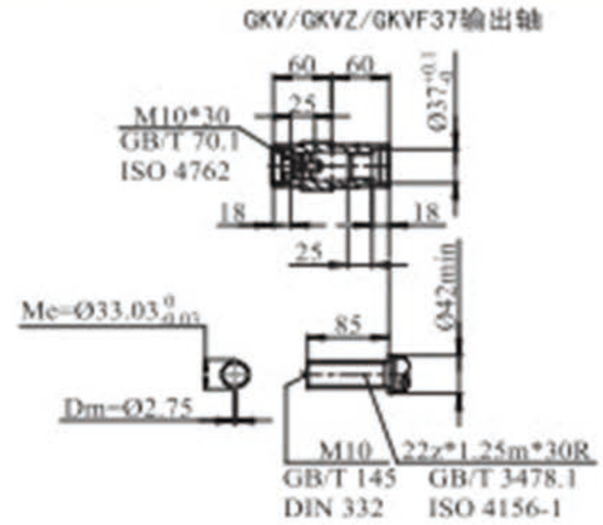

YE2电机机座号 Motor Size	63	71	80	90S	90L	100
L	225	260	290	300	330	340
AC	120	145	170	190	190	195
AD	110	130	135	145	145	180

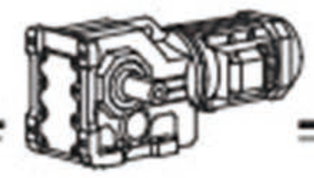

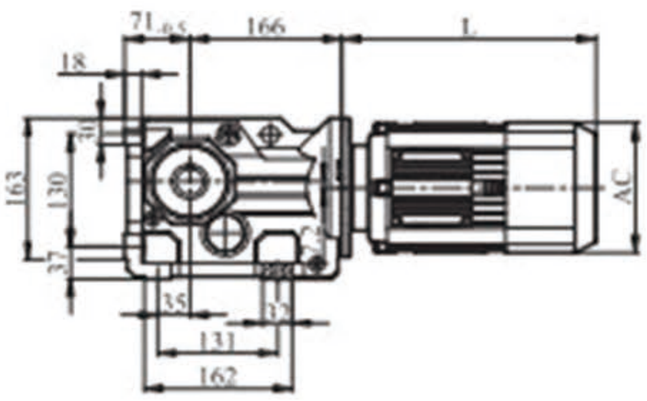

GK47

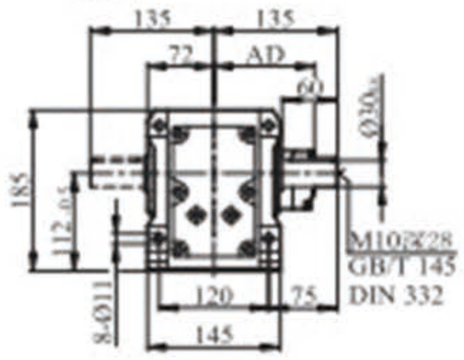

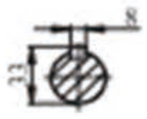

GKA47B GKH47B GKV47B

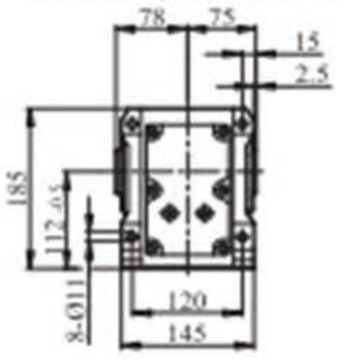

GKA/GKH/GKV47

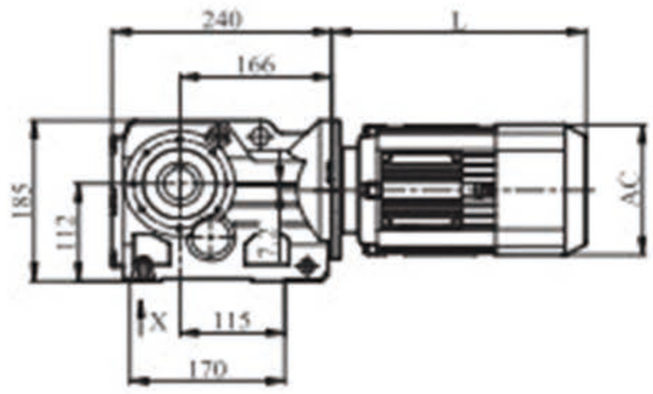

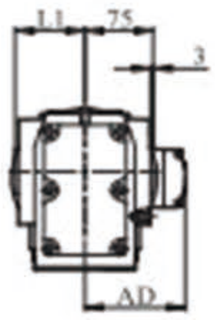

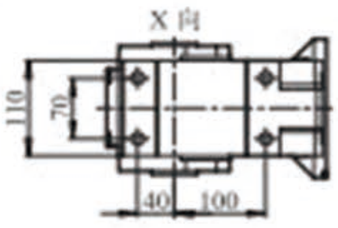

GKAZ/GKHZ/GKVZ47

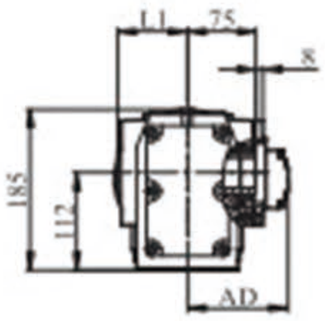

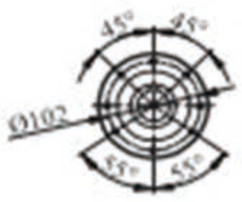

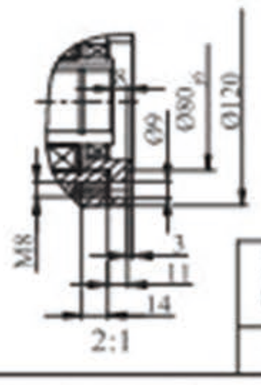

型号 Size	GKA	GKH	GKV
	GKAZ	GKHZ	GKVZ
	GKAF	GKHF	GKVF
L1	75	105	75

GKF47

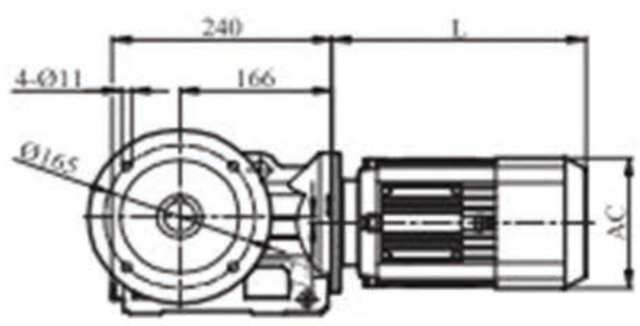

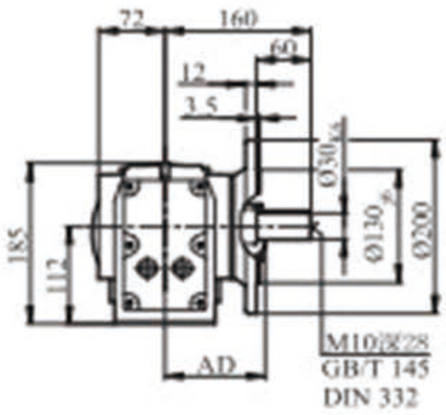

GKAF/GKHF/GKVF47

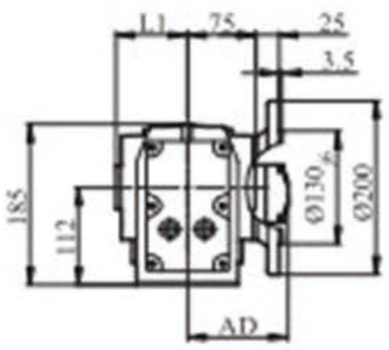

GKA47T

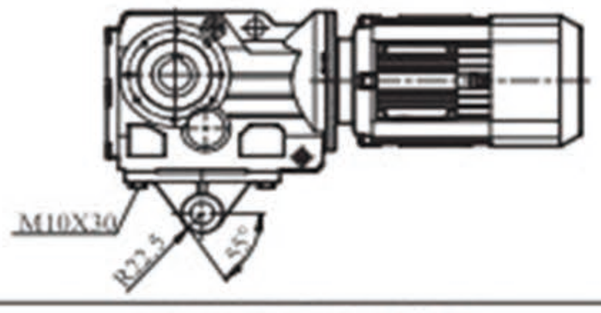

TA

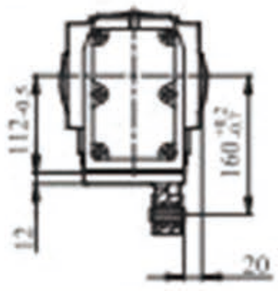

TB

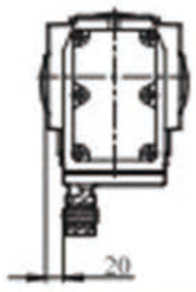

GKA/GKAZ/GKAF47输出轴

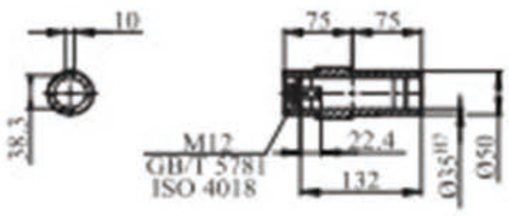

GKH/GKHZ/GLHF47输出轴

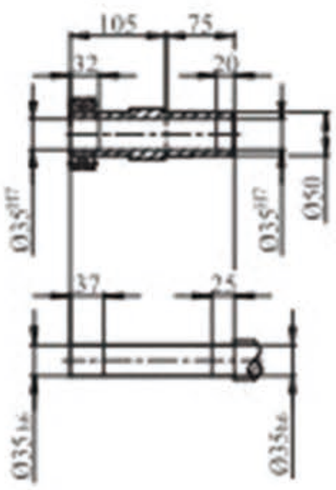

GKV/GKVZ/GKVF47输出轴

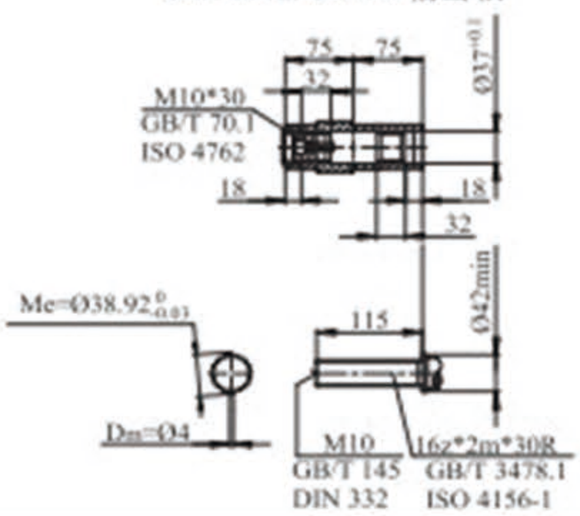

YE2电机机座号 Motor Size	63	71	80	90S	90L	100
L	205	260	290	300	320	330
AC	120	145	170	190	190	195
AD	110	130	135	145	145	180

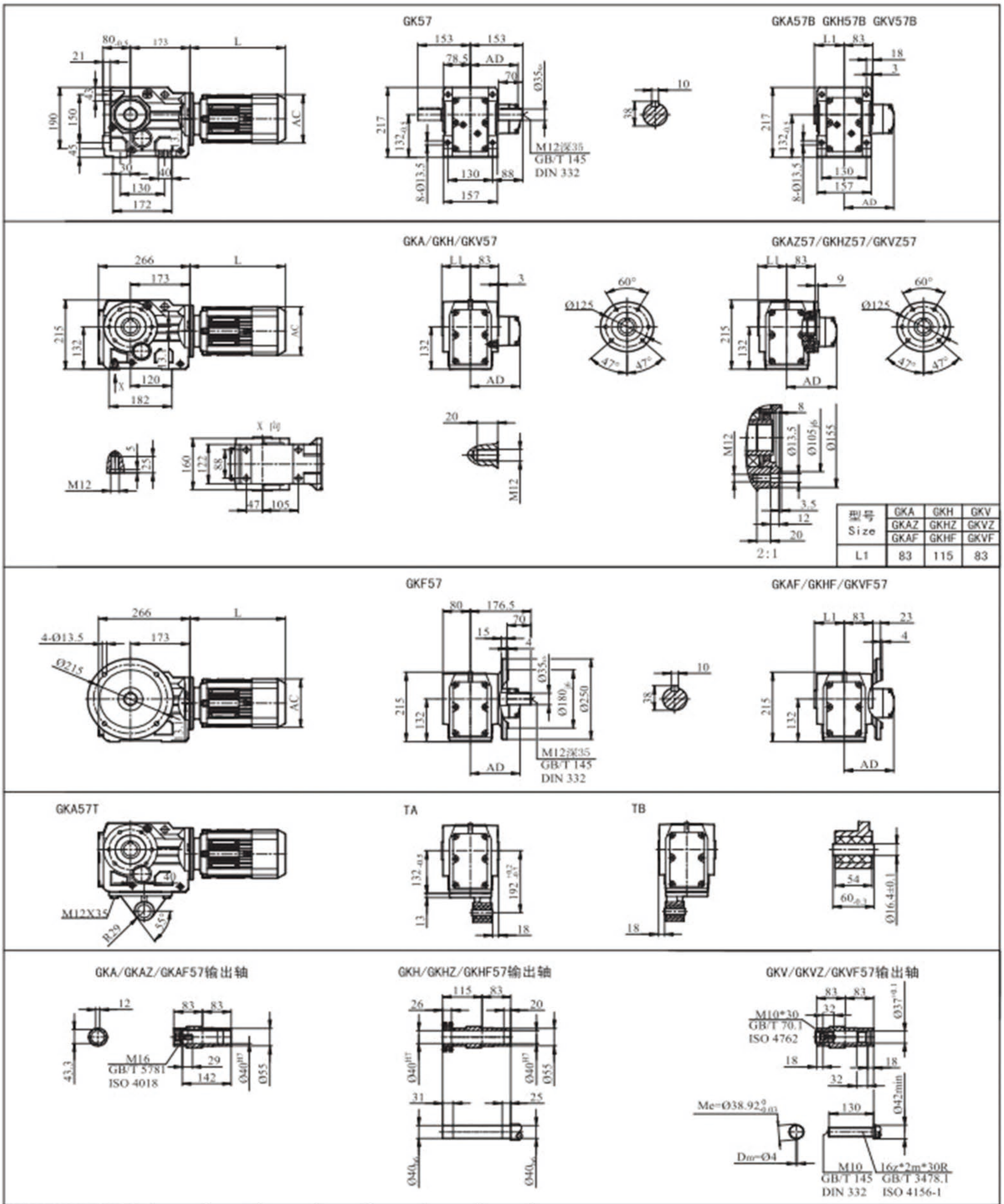

型号 Size	GKA	GKH	GKV
	GKAZ	GKHZ	GKVZ
	GKAF	GKHF	GKVF
L1	83	115	83

YE2电机机座号 Motor Size	63	71	80	90S	90L	100	112M
L	205	260	290	300	330	330	380
AC	120	145	170	190	190	195	230
AD	110	130	135	145	145	180	215

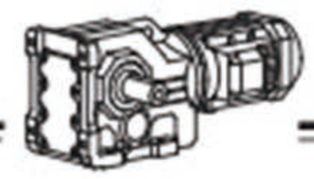

GK67

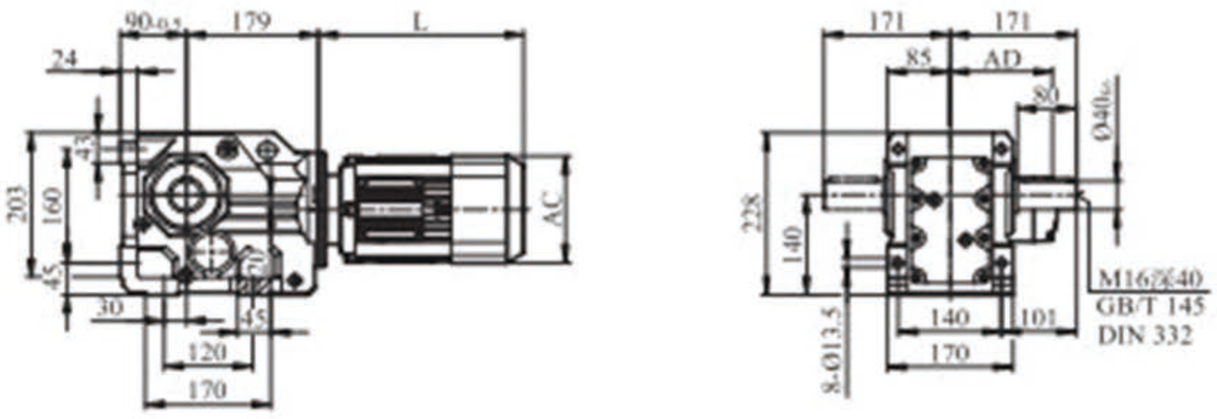

GKA67B GKH67B GKV67B

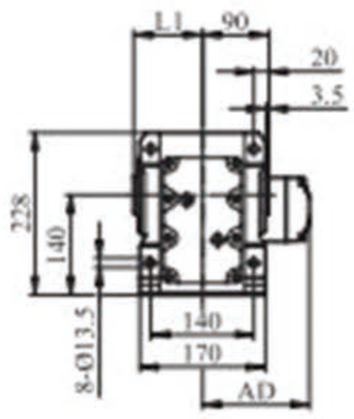

GKA/GKH/GKV67

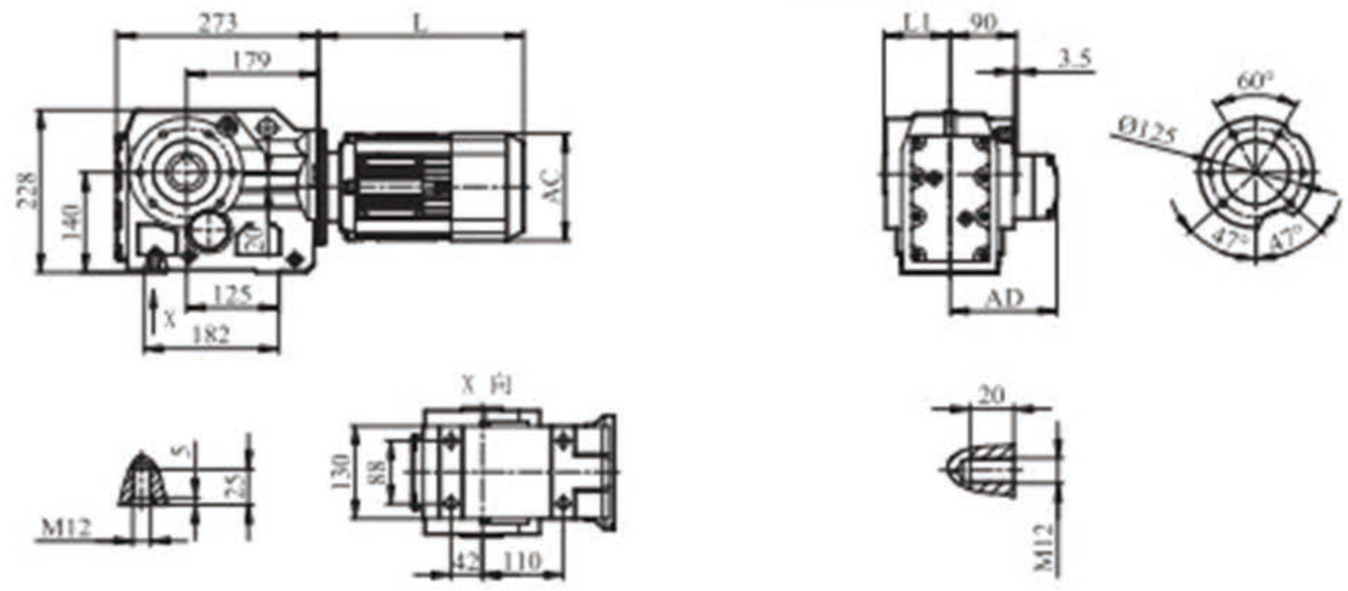

GKAZ/GKHZ/GKVZ67

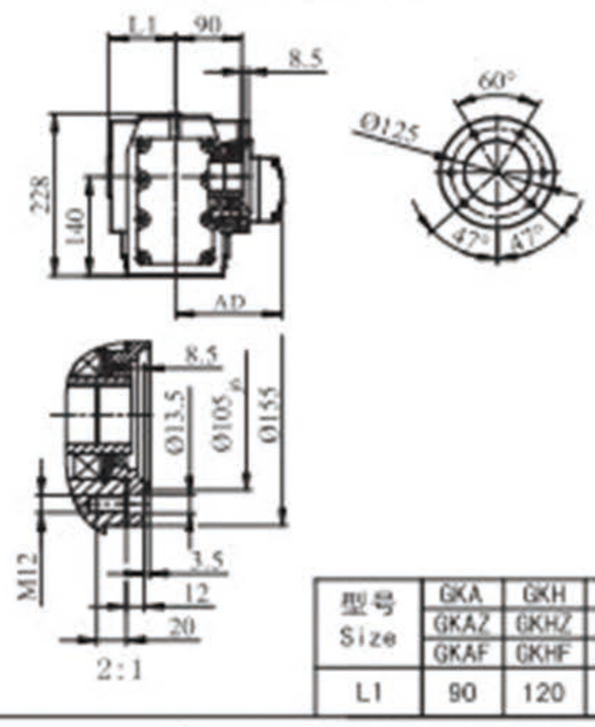

型号 Size	GKA	GKH	GKV
	GKAZ	GKHZ	GKVZ
	GKAF	GKHF	GKVF
L1	90	120	90

GKF67

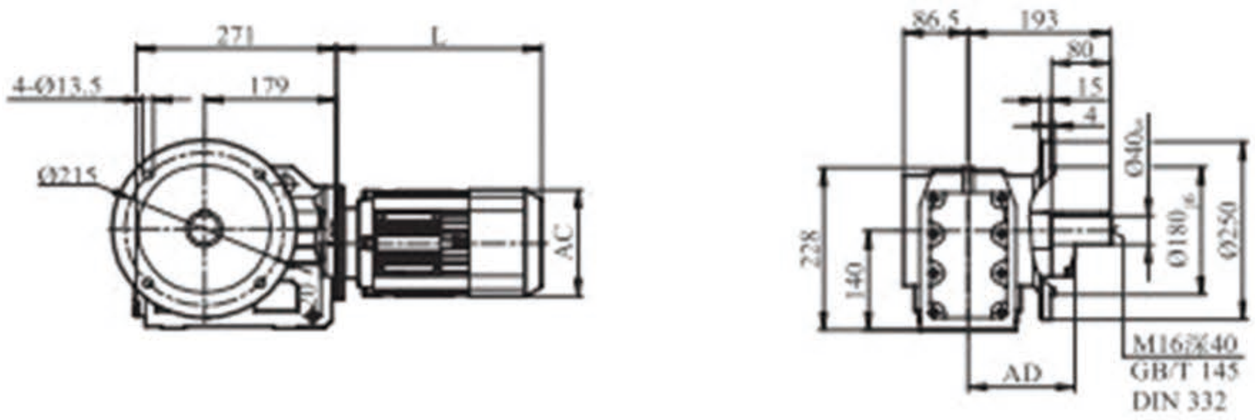

GKAF/GKHF/GKVF67

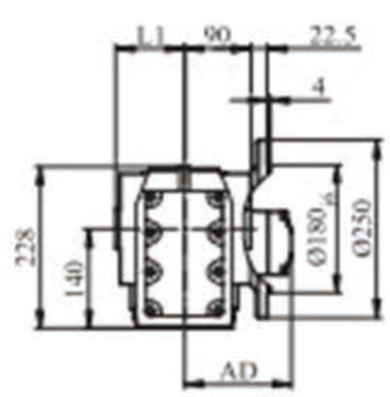

GKA67T

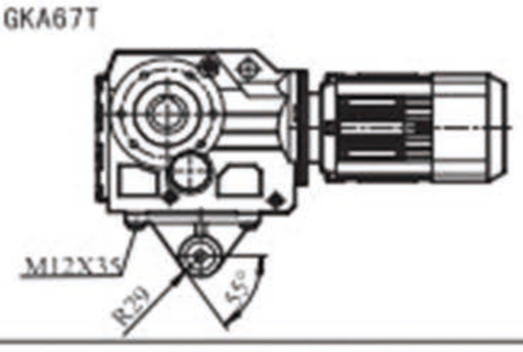

TA

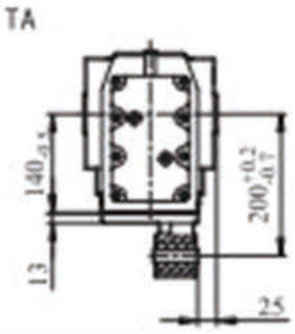

TB

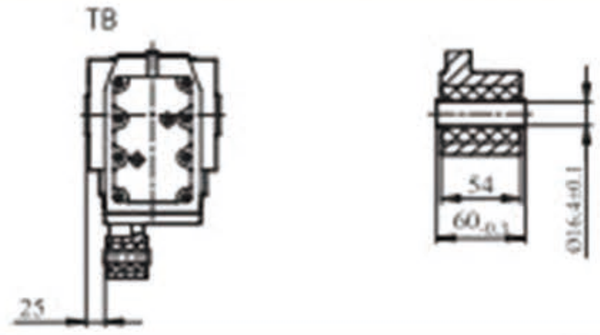

GKA/GKAZ/GKAF67输出轴

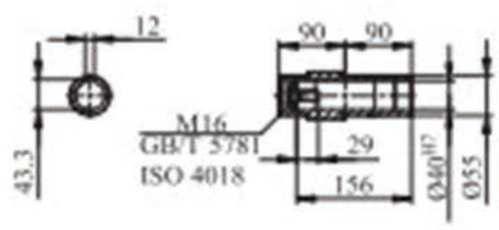

GKH/GKHZ/GKHF67输出轴

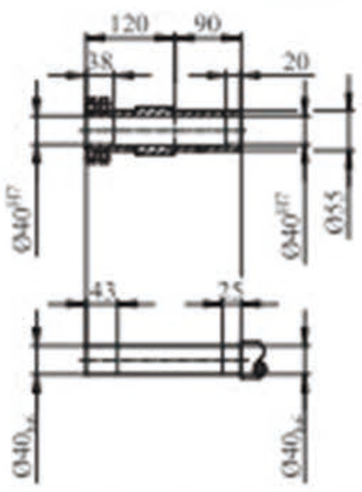

GKV/GKVZ/GKVF67输出轴

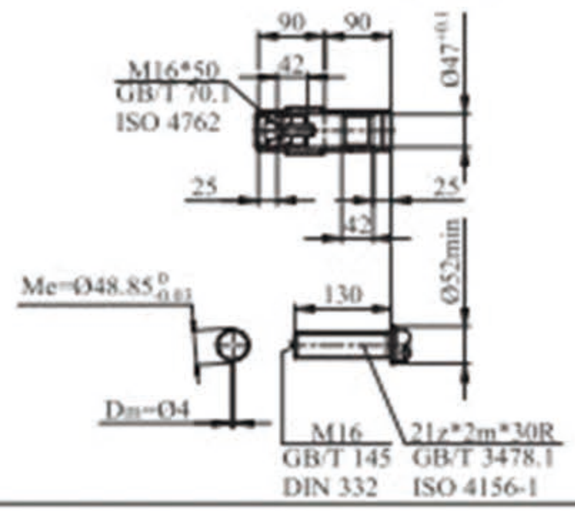

YE2电机机座号 Motor Size	63	71	80	90S	90L	100	112M	132S
L	205	260	290	300	330	330	380	430
AC	120	145	170	190	190	210	230	280
AD	110	130	135	145	145	160	215	215

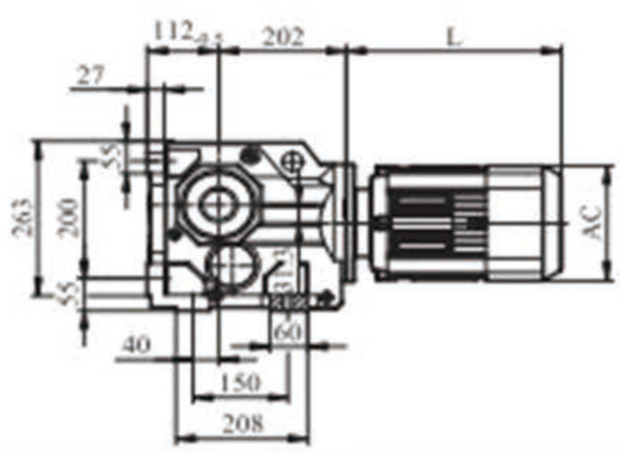

GK77

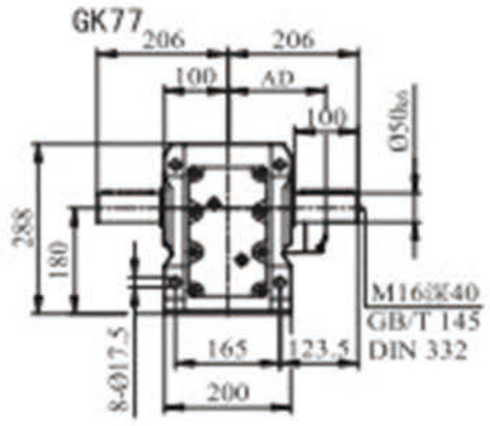

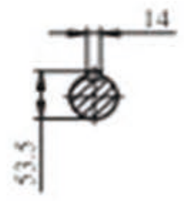

GKA77B GKH77B GKV77B

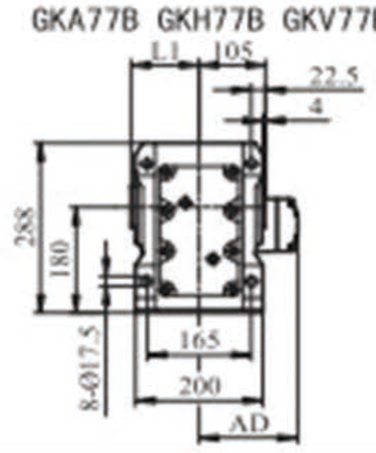

GKA/GKH/GKV77

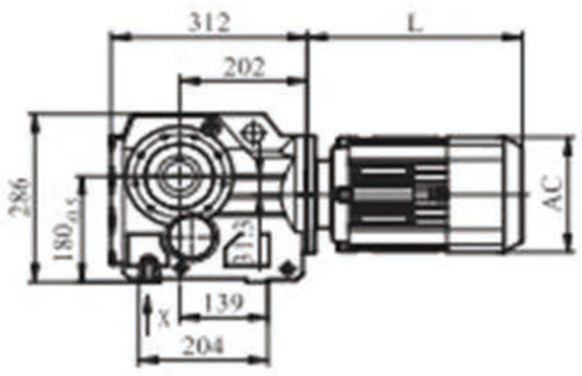

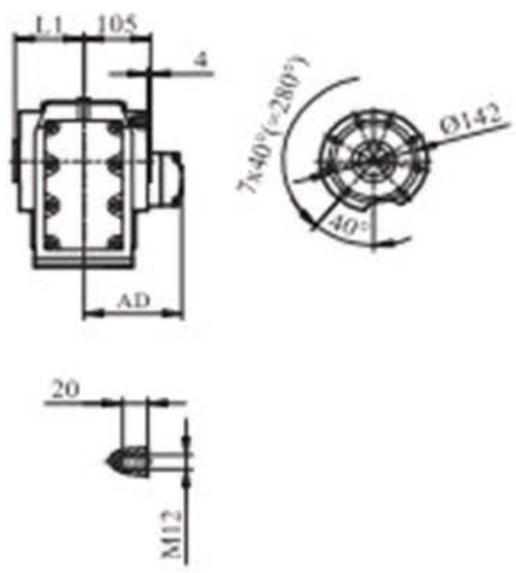

GKAZ/GKHZ/GKVZ77

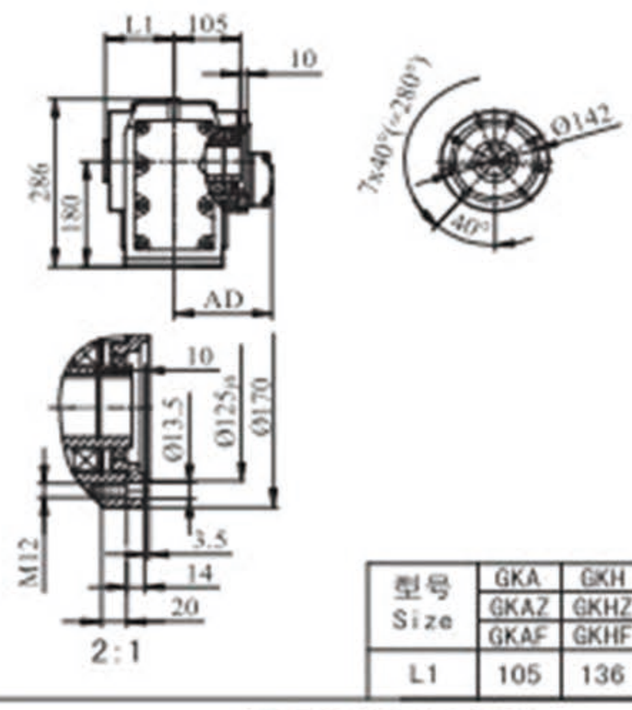

型号 Size	GKA	GKH	GKV
	GKAZ	GKHZ	GKVZ
	GKAF	GKHF	GKVF
L1	105	136	105

GKF77

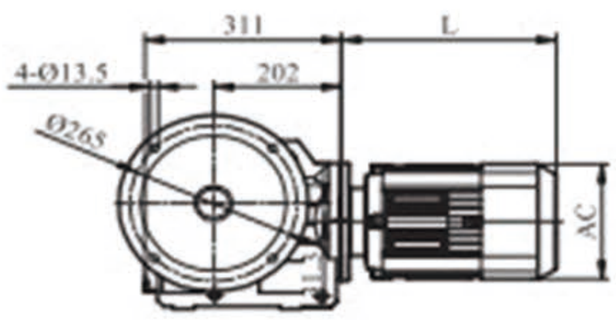

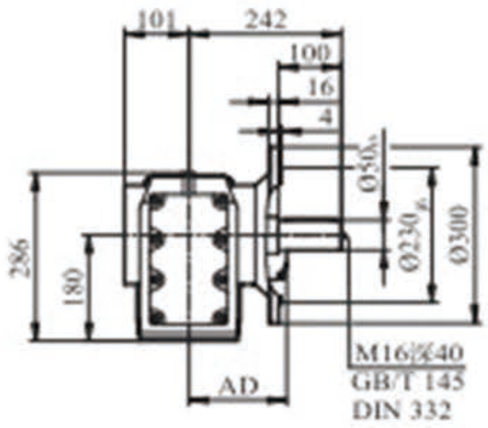

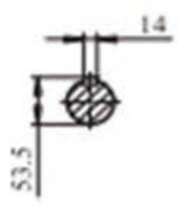

GKAF/GKHF/GKVF77

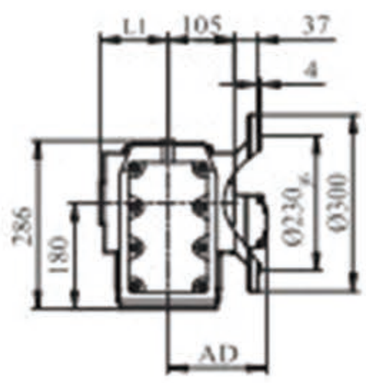

GKA77T

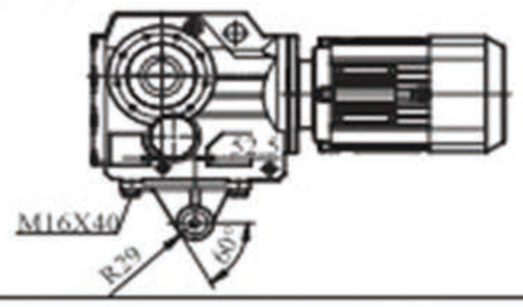

TA

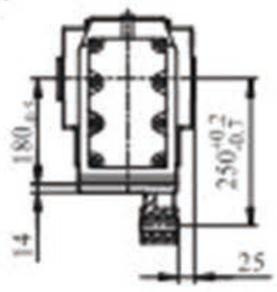

TB

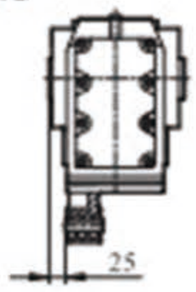

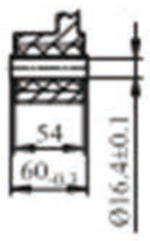

GKA/GKAZ/GKAF77输出轴

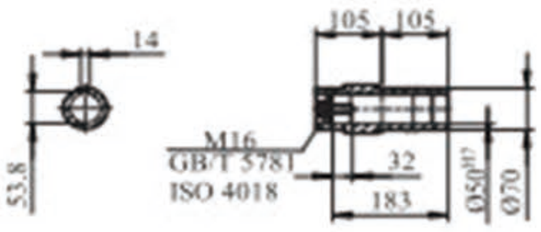

GKH/GKHZ/GKHF77输出轴

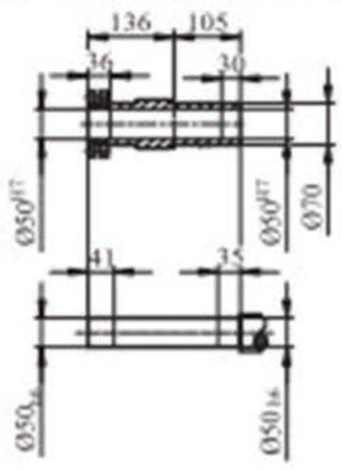

GKV/GKVZ/GKVF77输出轴

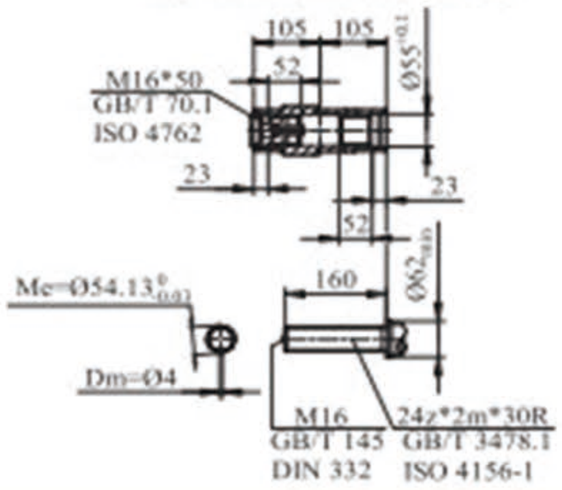

YE2电机机座号 Motor Size	71	80	90S	90L	100	112M	132S	132M	160M
L	254	284	292	322	322	370	418	457	524
AC	145	170	190	190	210	230	280	280	315
AD	130	135	145	145	160	215	215	215	255

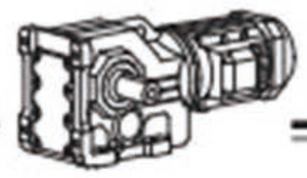

GK87

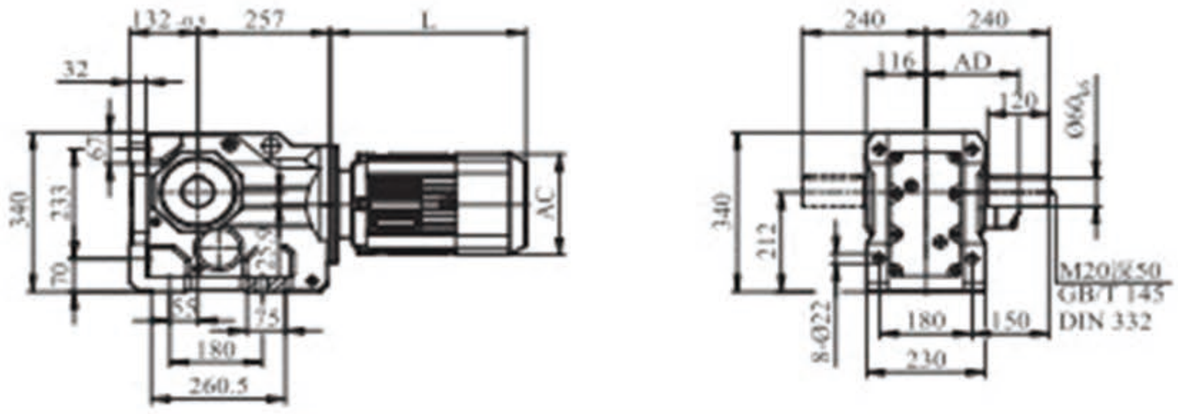

GKA87B GKH87B GKV87B

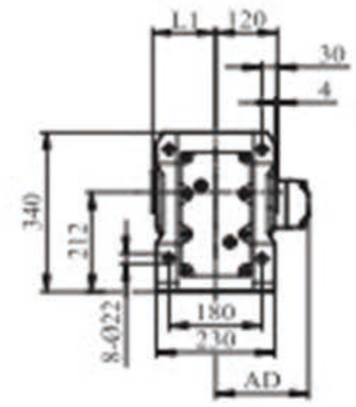

GKA/GKH/GHV87

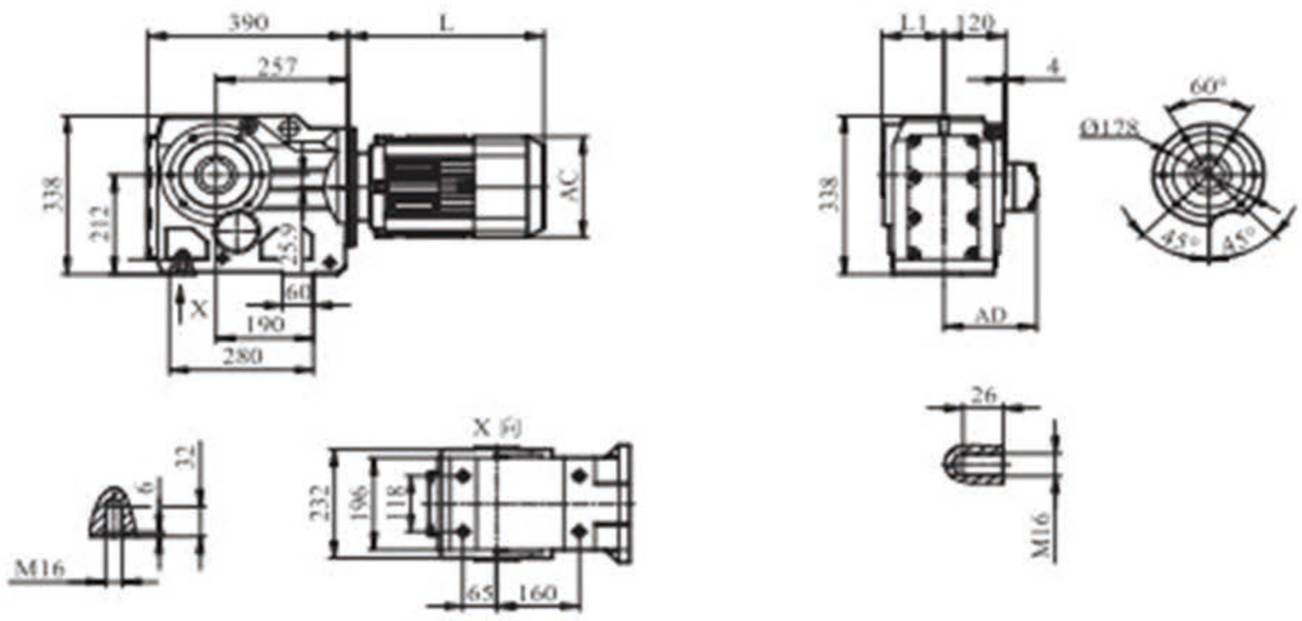

GKAZ/GKHZ/GHVZ87

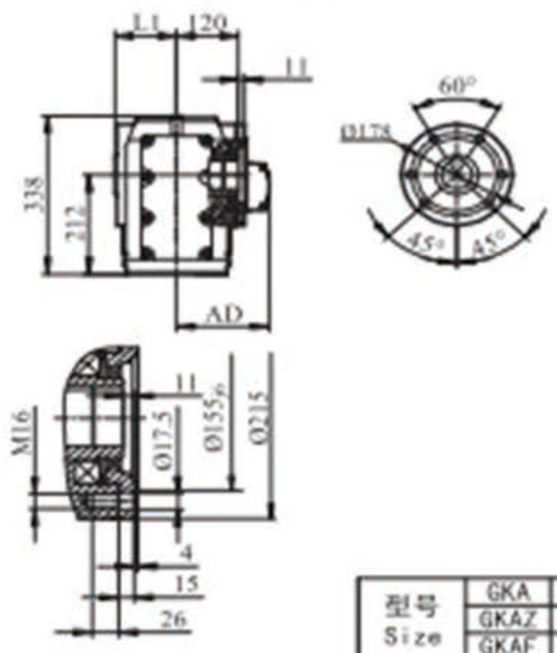

2:1

型号 Size	GKA	GKH	GKV
	GKAZ	GKHZ	GKVZ
	GKAF	GKHF	GKVF
L1	120	161	120

GKF87

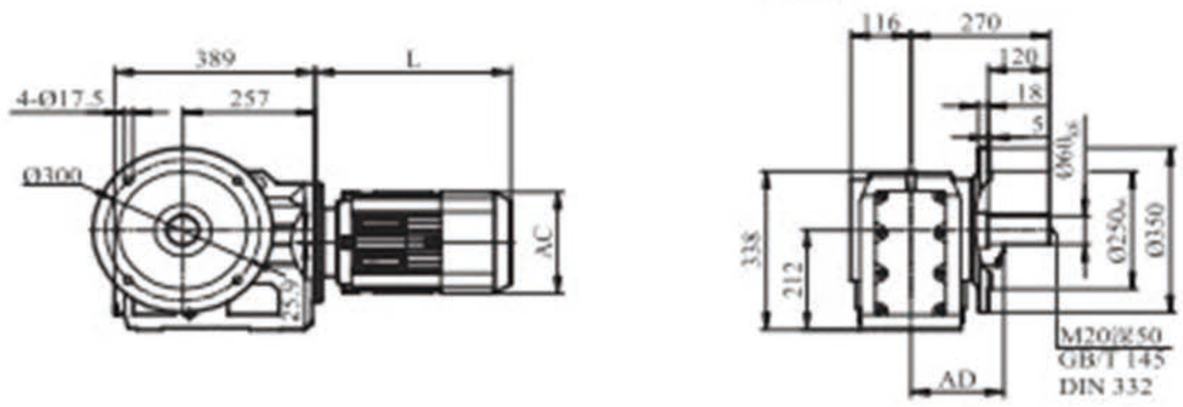

GKAF/GKHF/GKVF87

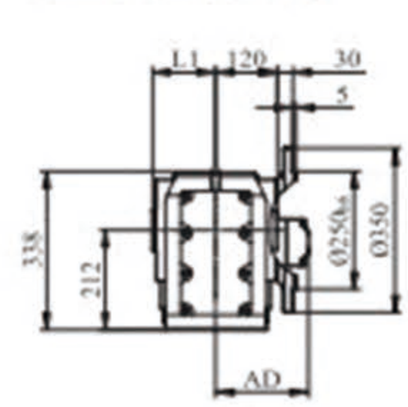

GKA87T

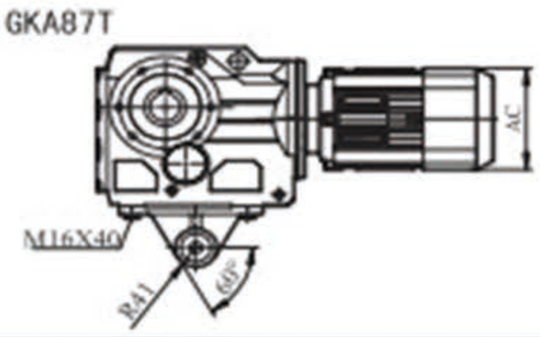

TA

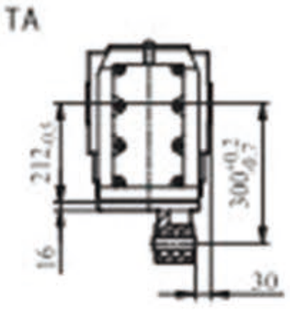

TB

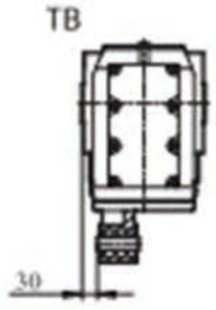

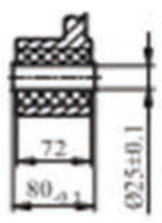

GKA/GKAZ/GKAF87输出轴

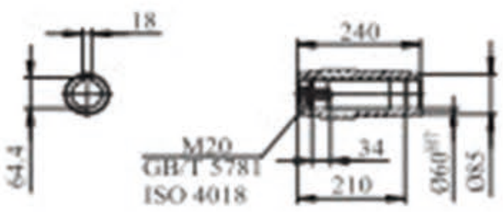

GKH/GKHZ/GKHF87输出轴

GKV/GKVZ/GKVF87输出轴

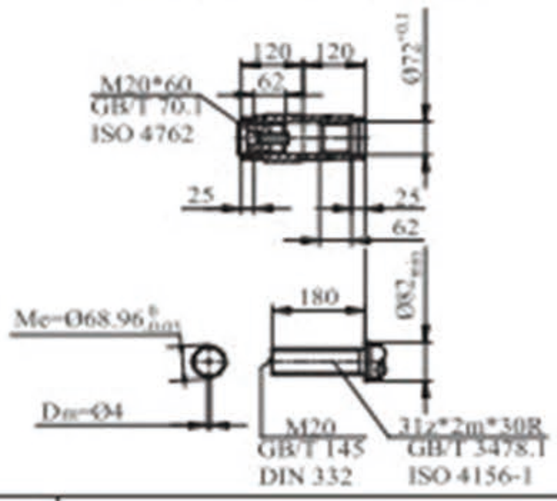

YE2电机机座号 Motor Size	80	90S	90L	100	112M	132S	132M	160M	160L	180M	180L
L	280	288	318	318	365	413	452	524	547	583	616
AC	170	190	190	210	230	280	280	315	315	350	350
AD	135	145	145	160	215	215	215	255	255	280	280

GK97

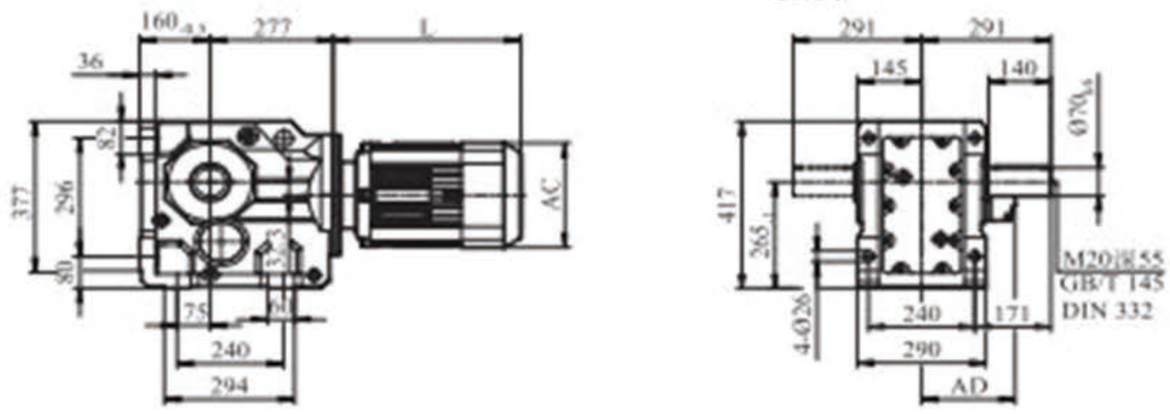

GKA97B GKH97B GKV97B

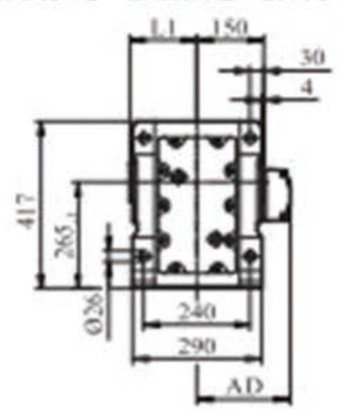

GKA/GKH/GKV97

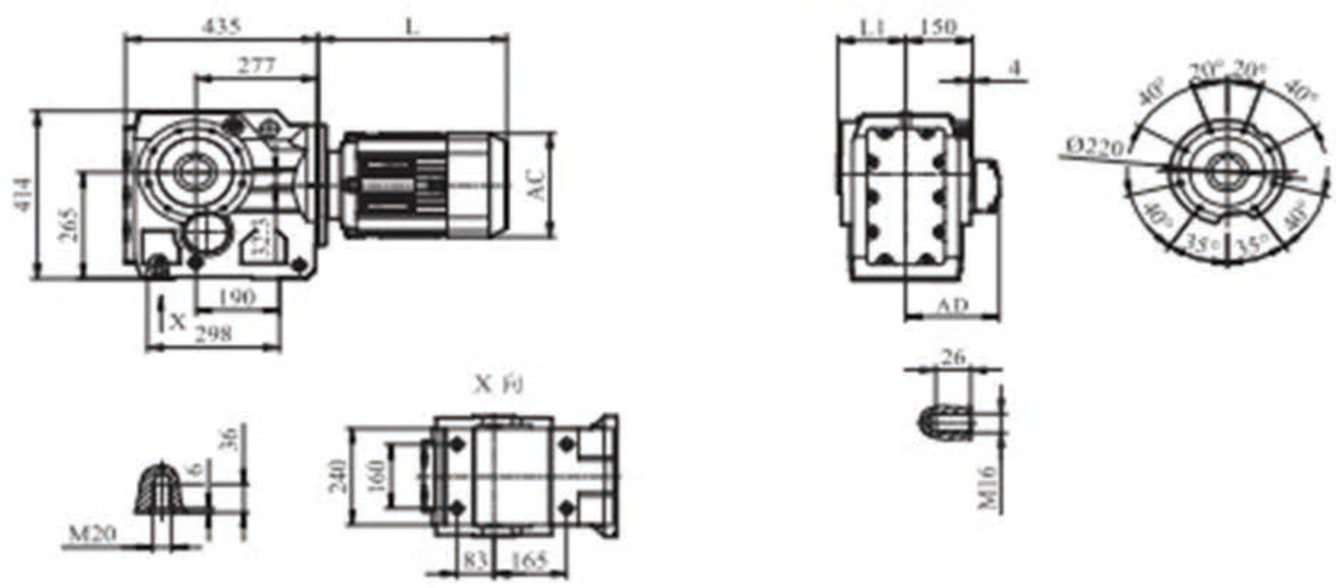

GKAF/GKHF/GKVF97

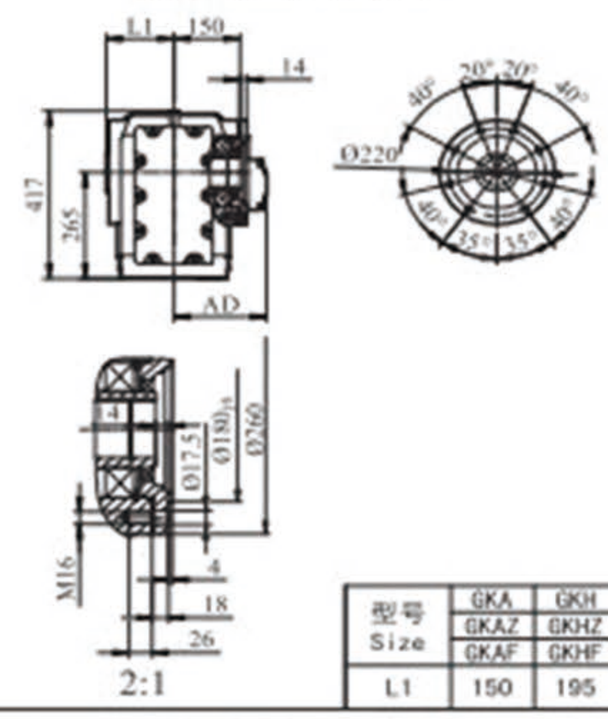

型号 Size	GKA	GKH	GKV
	GKAZ	GKHZ	GKVZ
	GKAF	GKHF	GKVF
L1	150	195	150

GKF97

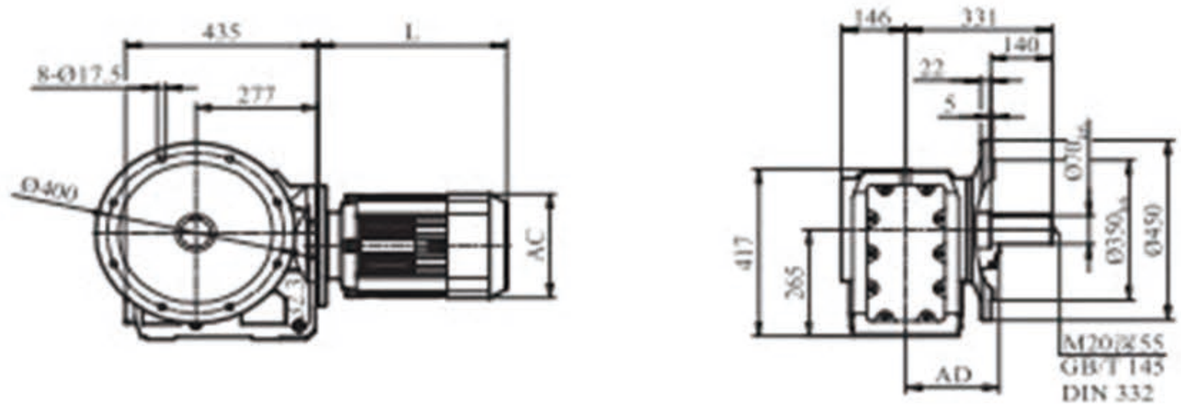

GKAF/GKHF/GKVF97

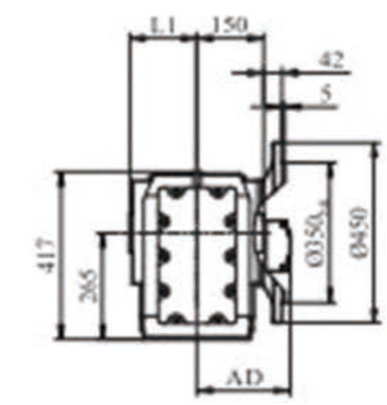

GK97B

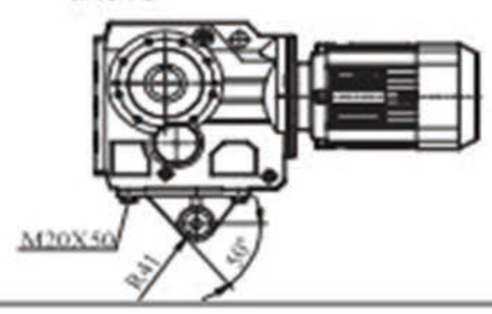

TA

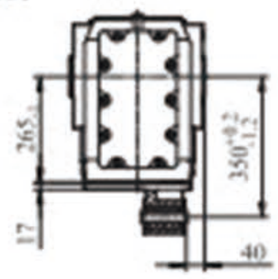

TB

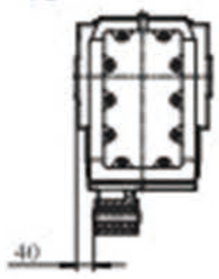

GKA/GKAZ/GKAF97输出轴

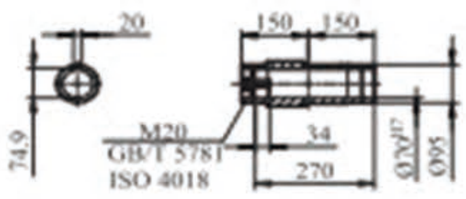

GKH/GKHZ/GKHF97输出轴

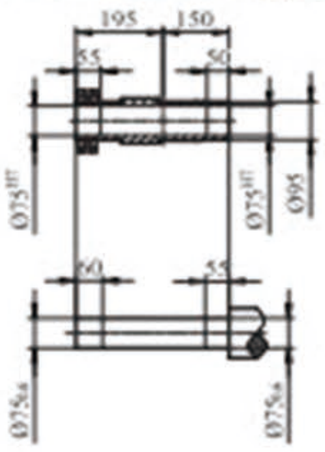

GKV/GKVZ/GKVF97输出轴

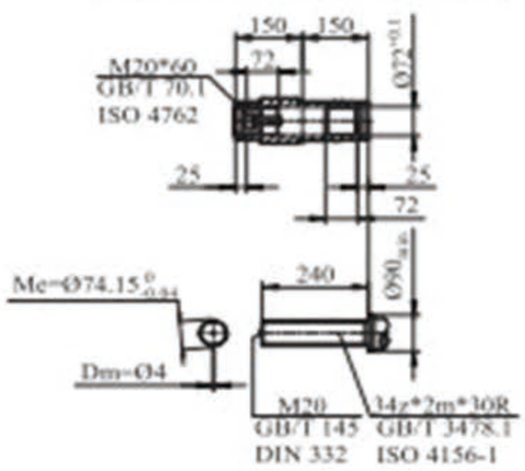

YE2电机机座号 Motor Size	90S	90L	100	112M	132S	132M	160M	160L	180M	180L	200L	
L	280	310	312	360	408	487	524	519	555	588	654	
AC	190	190	210	230	280	280	315	315	350	350	395	
AD	145	145	160	215	215	215	255	255	280	280	305	

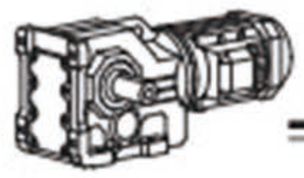

GK107

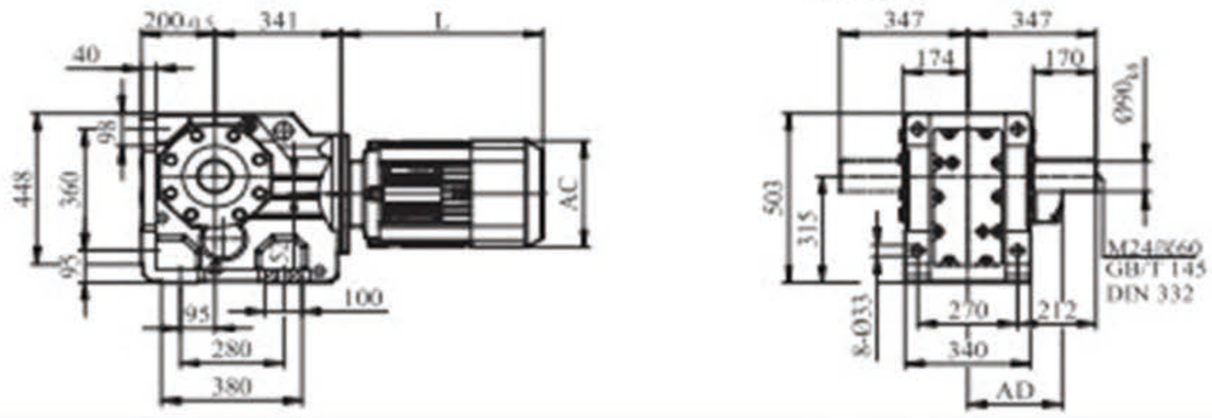

GKA107B GKH107B GKV107B

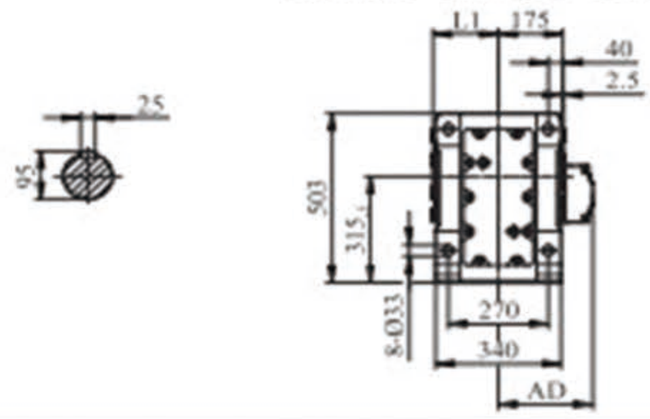

GKA/GKH/GKV107

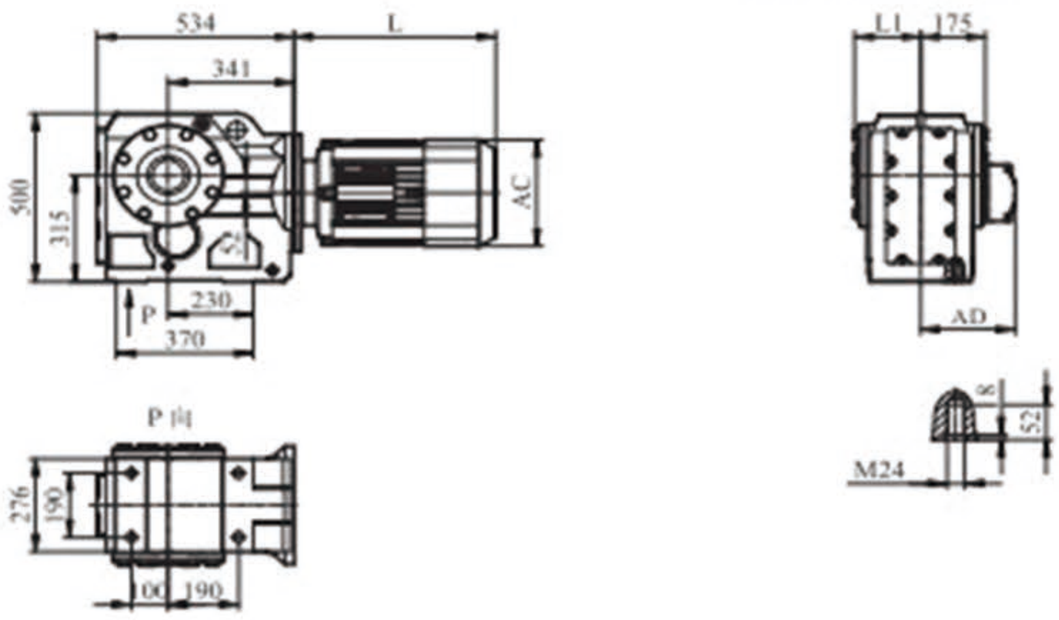

GKAZ/GKHZ/GKVZ107

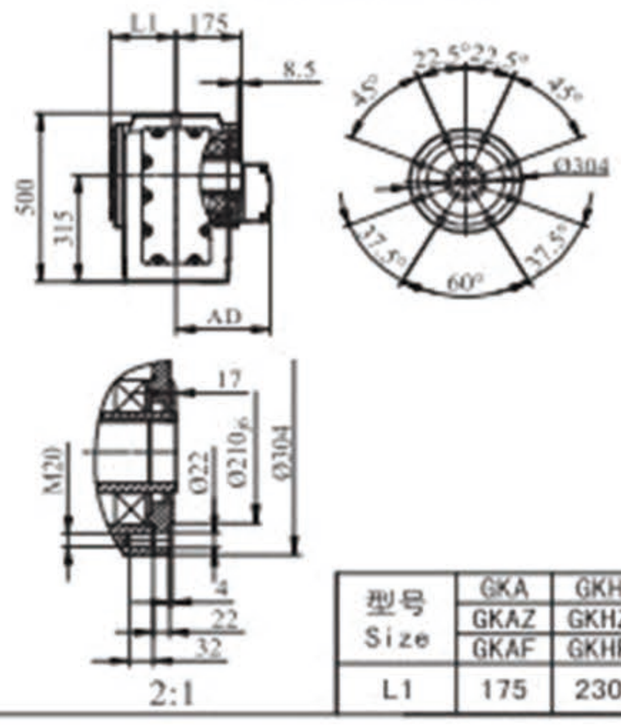

型号 Size	GKA	GKH	GKV
	GKAZ	GKHZ	GKVZ
	GKAF	GKHF	GKVF
L1	175	230	175

GKF107

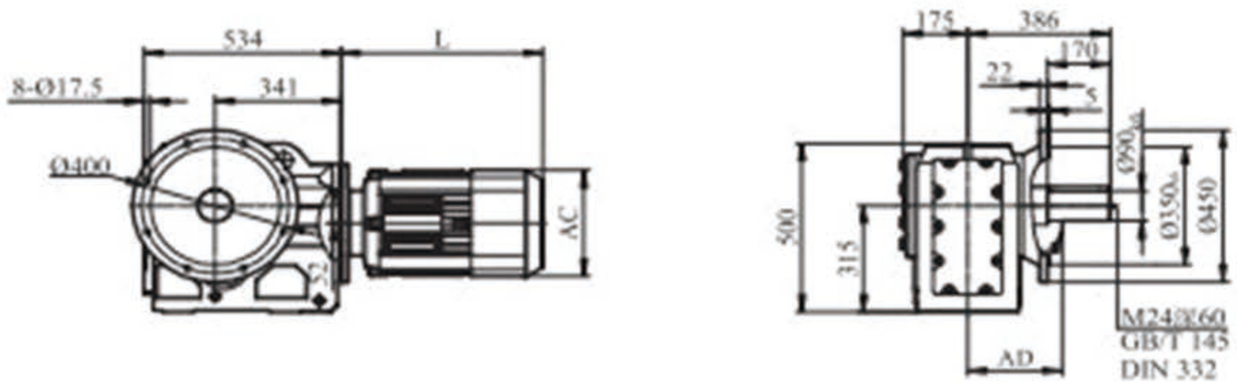

GKAF/GKHF/GKVF107

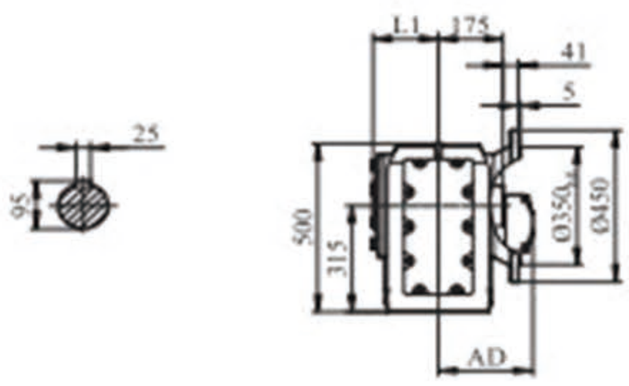

GKA107T

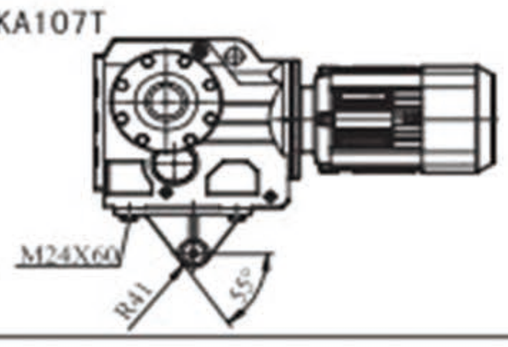

TA

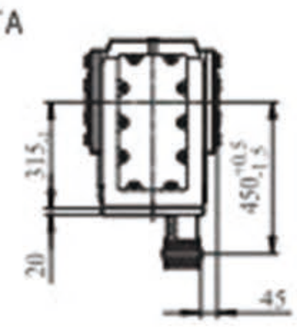

TB

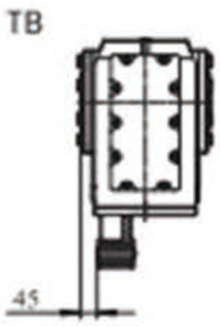

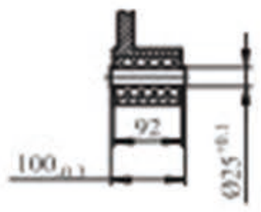

GKA/GKAZ/GKAF107输出轴

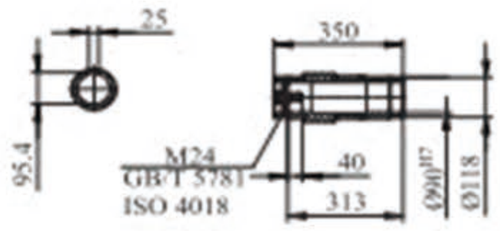

GKH/GKHZ/GKHF107输出轴

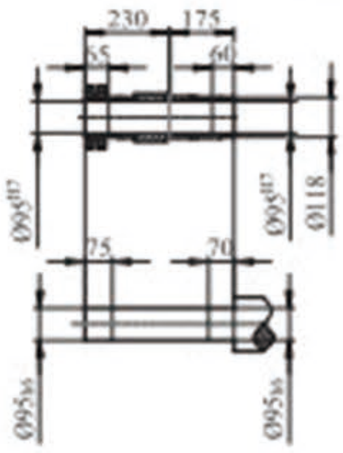

GKV/GKVZ/GKVF107输出轴

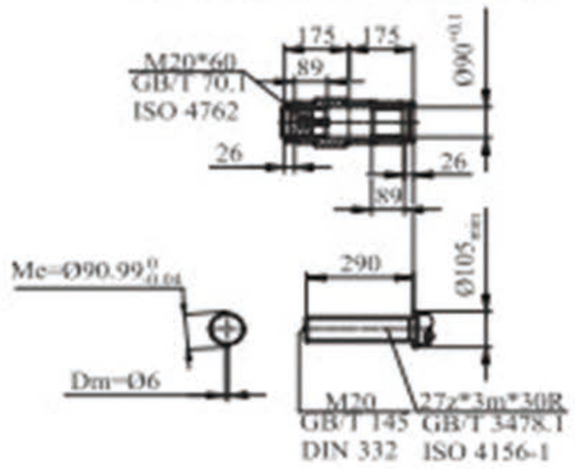

YE2电机机座号 Motor Size	100	112M	132S	132M	160M	160L	180M	180L	200L	225S	225M
L	308	354	403	482	524	519	555	588	654	680	702
AC	210	230	280	280	315	315	350	350	395	450	450
AD	160	215	215	215	255	255	280	280	305	335	335

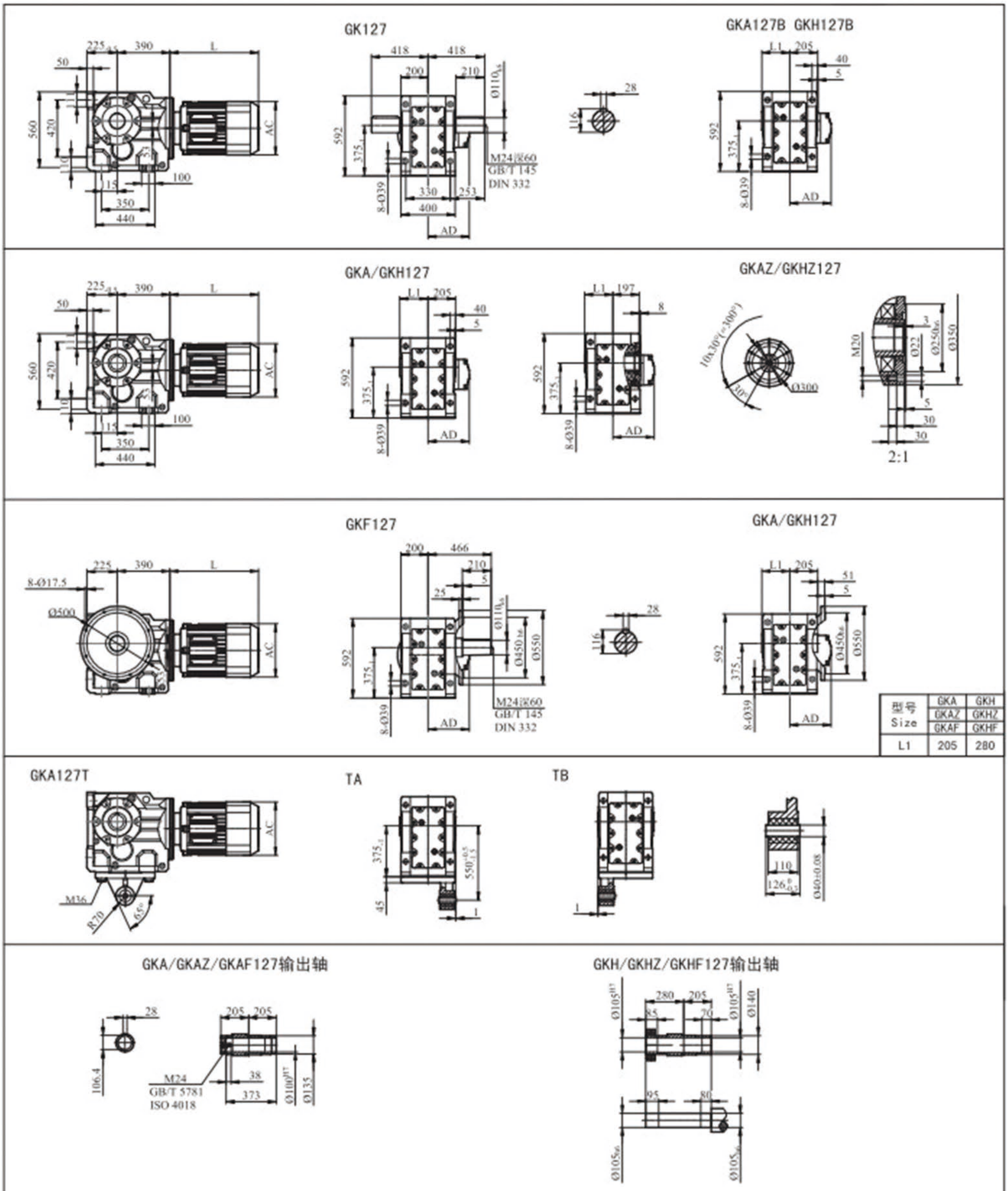

型号 Size	GKA	GKH
	GKAZ	GKHZ
	GKAF	GKHF
L1	205	280

YE2电机机座号 Motor Size	160M	160L	180M	180L	200L	225S	225M	250M	280S	280M
L	567	602	635	666	642	669	691	770	828	879
AC	315	315	350	350	395	450	450	480	530	530
AD	255	255	280	280	305	335	335	370	410	410

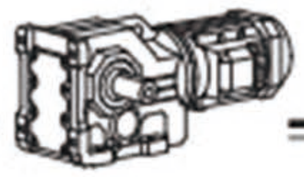

GK157

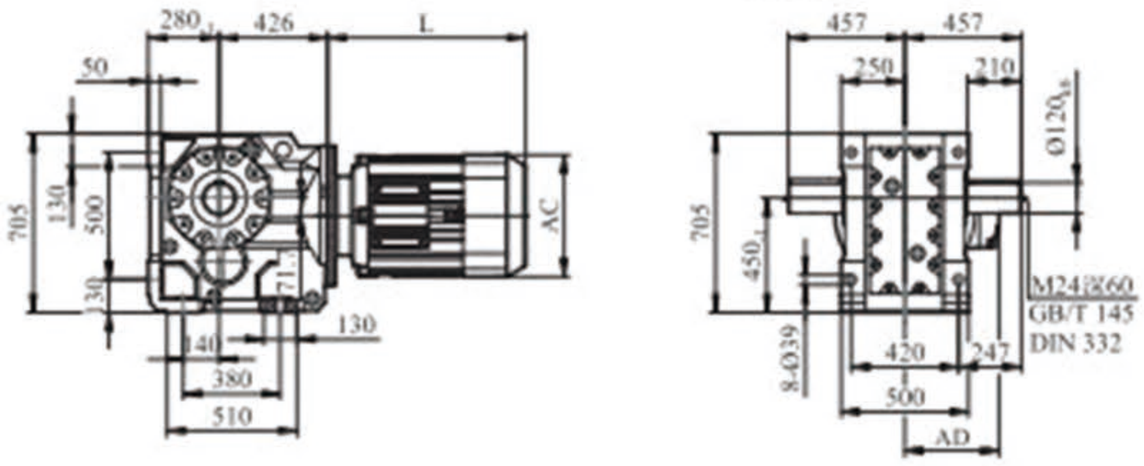

GKA157B GKH157B

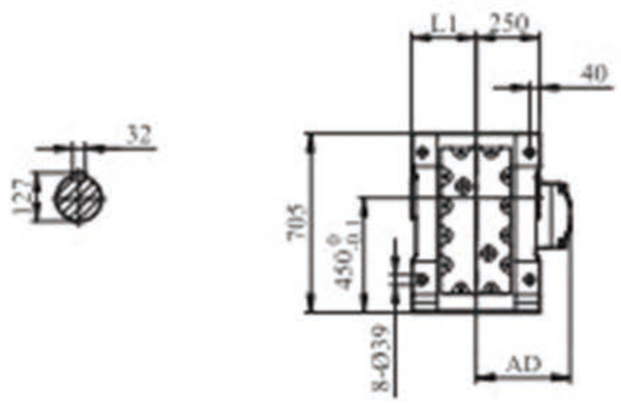

GKA/GKH157

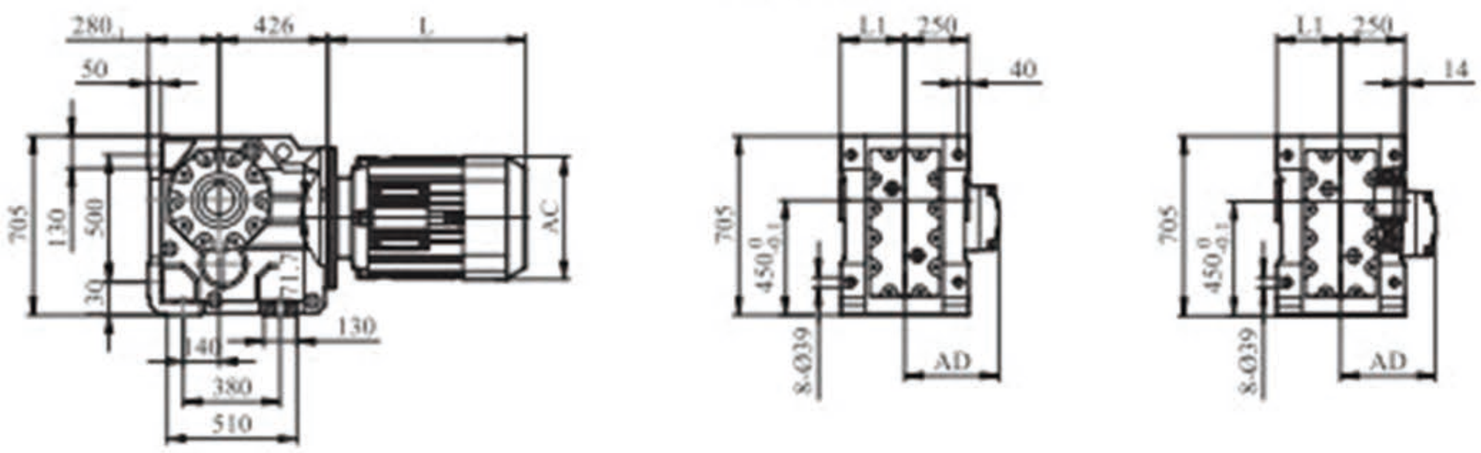

GKAZ/GKHZ157

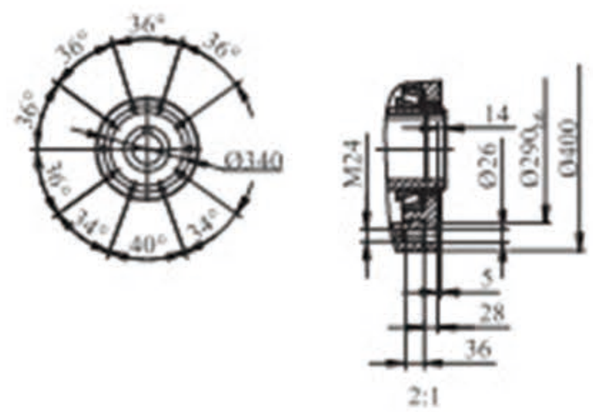

GKF157

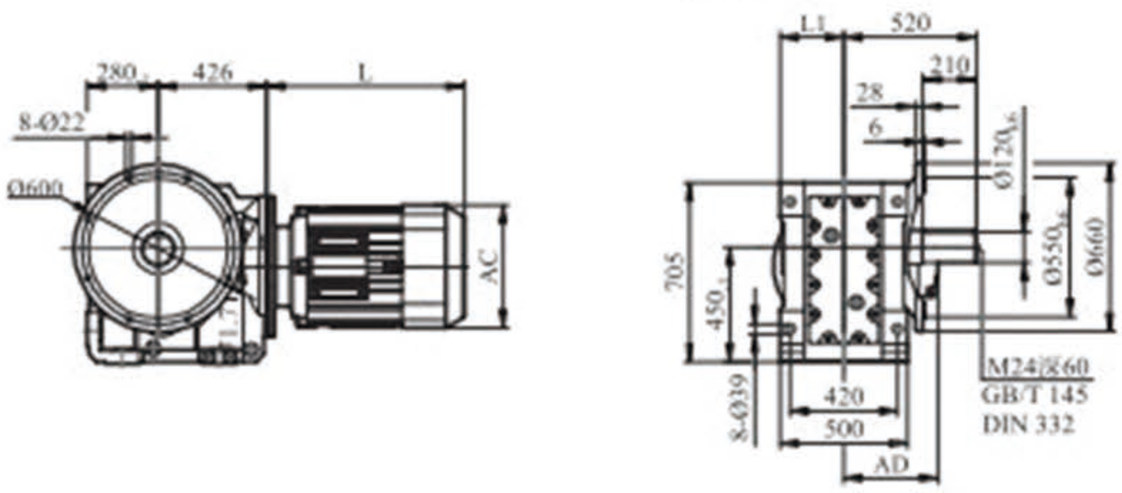

GKAF/GKHF157

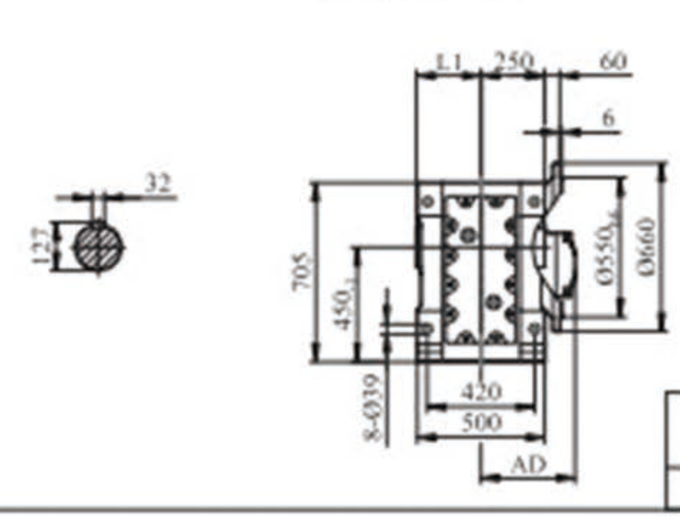

型号 Size	GKA	GKH
	GKAZ	GKHZ
	GKAF	GKHF
L1	250	330

GK157B

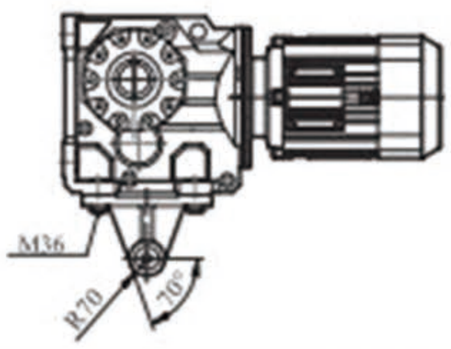

TA

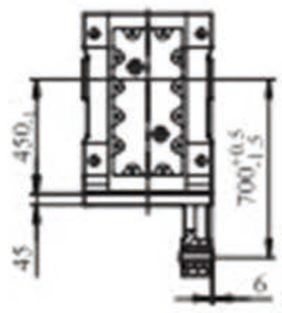

TB

GKA/GKAZ/GKAF157输出轴

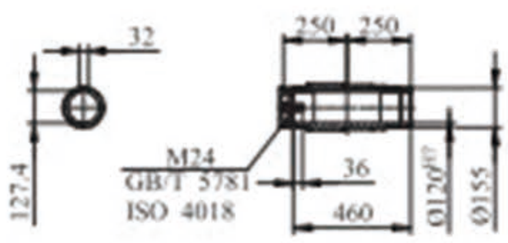

GKH/GKHZ/GKHF157输出轴

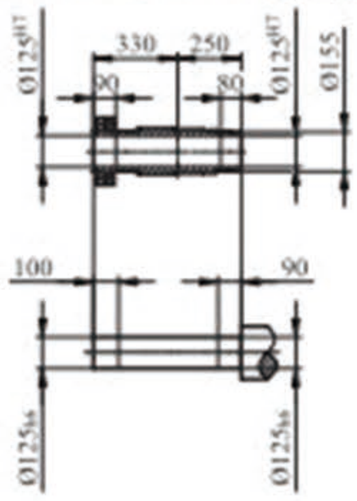

YE2电机机座号 Motor Size	160M	160L	180M	180L	200L	225S	225M	250M	280S	280M	315S	315M	315L
L	567	602	635	666	642	669	691	770	828	879	1100	1210	1210
AC	315	315	350	350	395	450	450	480	530	530	645	645	645
AD	255	255	280	280	305	335	335	370	410	410	530	530	530

GK167

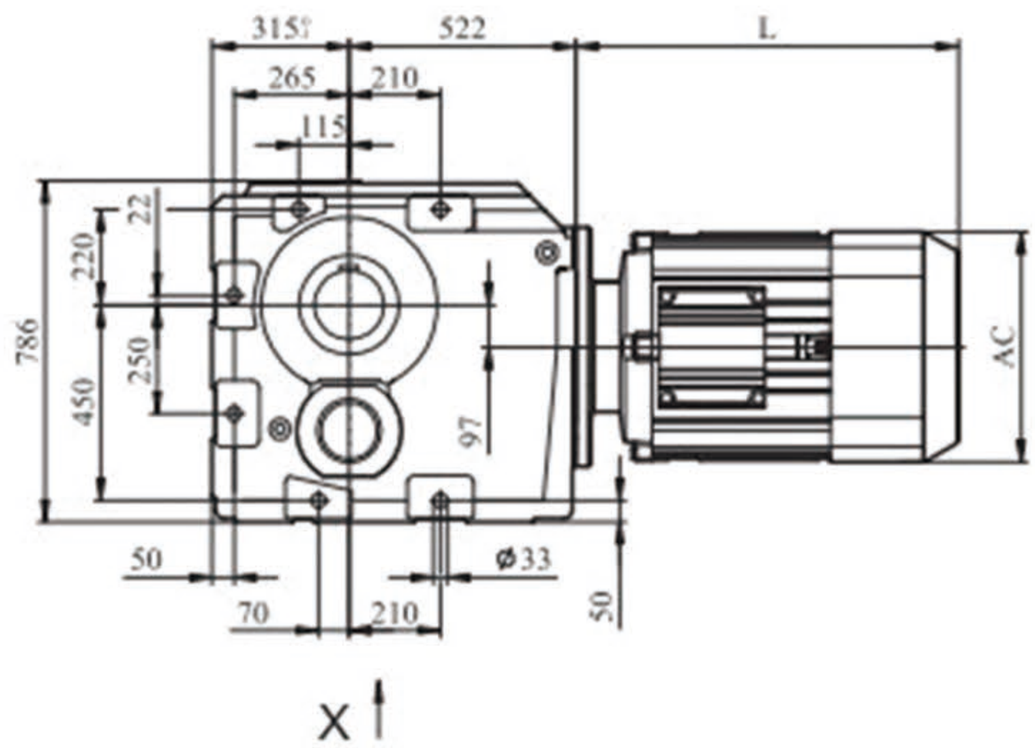

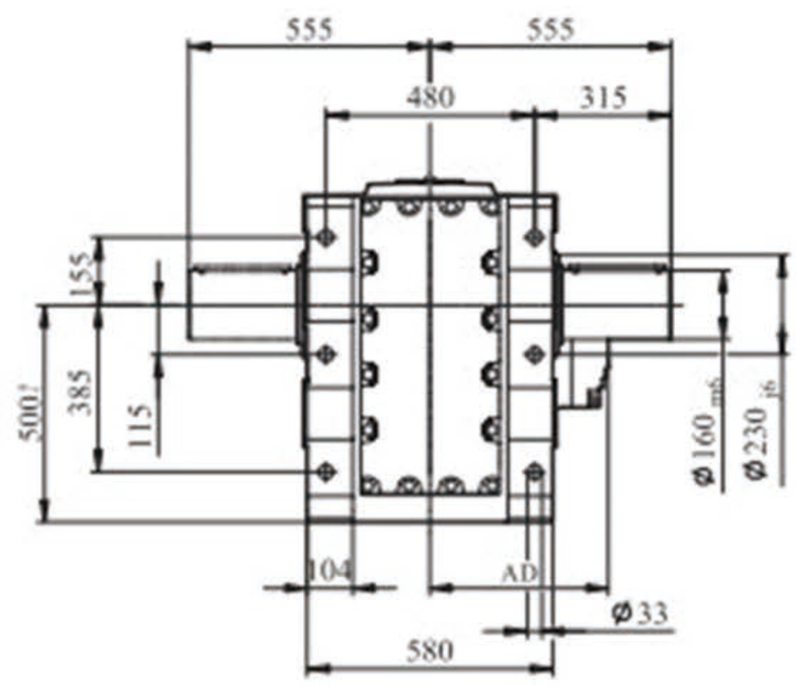

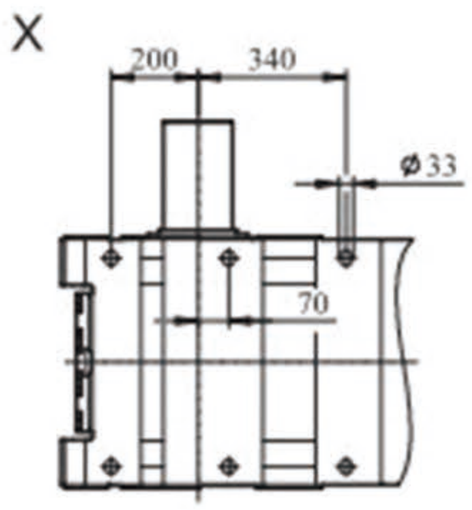

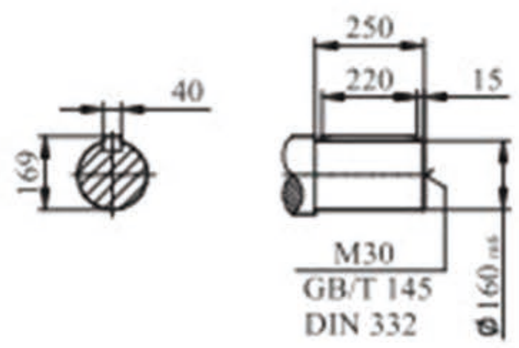

GKA/GKH167

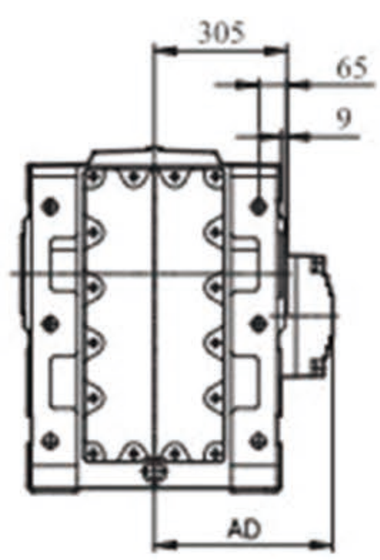

GKH167输出轴

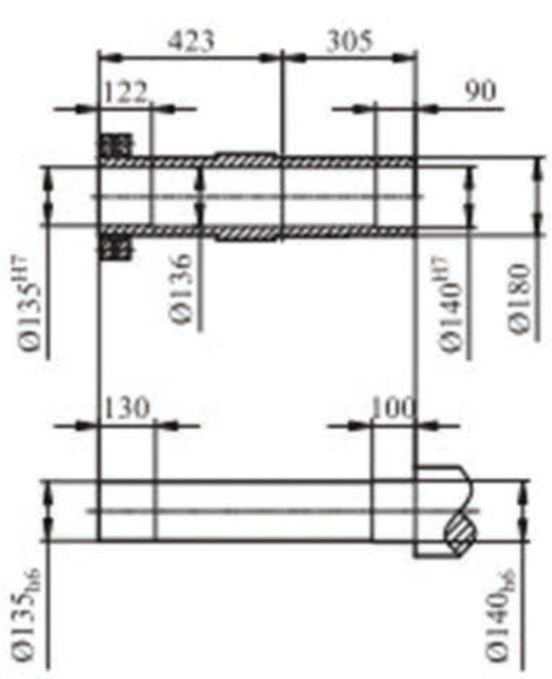

GKA167输出轴

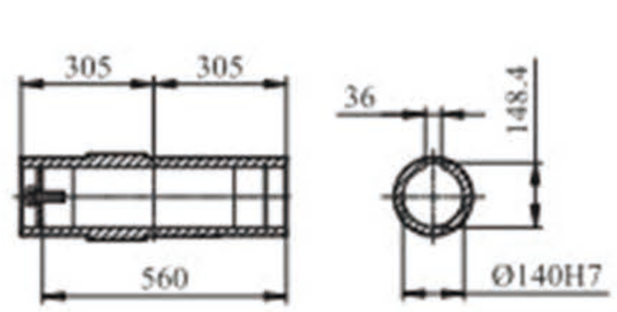

YE2电机机座号 Motor Size	160M	160L	180M	180L	200L	225S	225M	250M	280S	280M	315S	315M	315L	
L	567	602	635	666	642	669	691	770	828	879	1100	1210	1210	
AC	315	315	350	350	395	450	450	480	530	530	645	645	645	
AD	255	255	280	280	305	335	335	370	410	410	530	530	530	

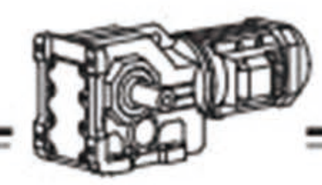

GK187

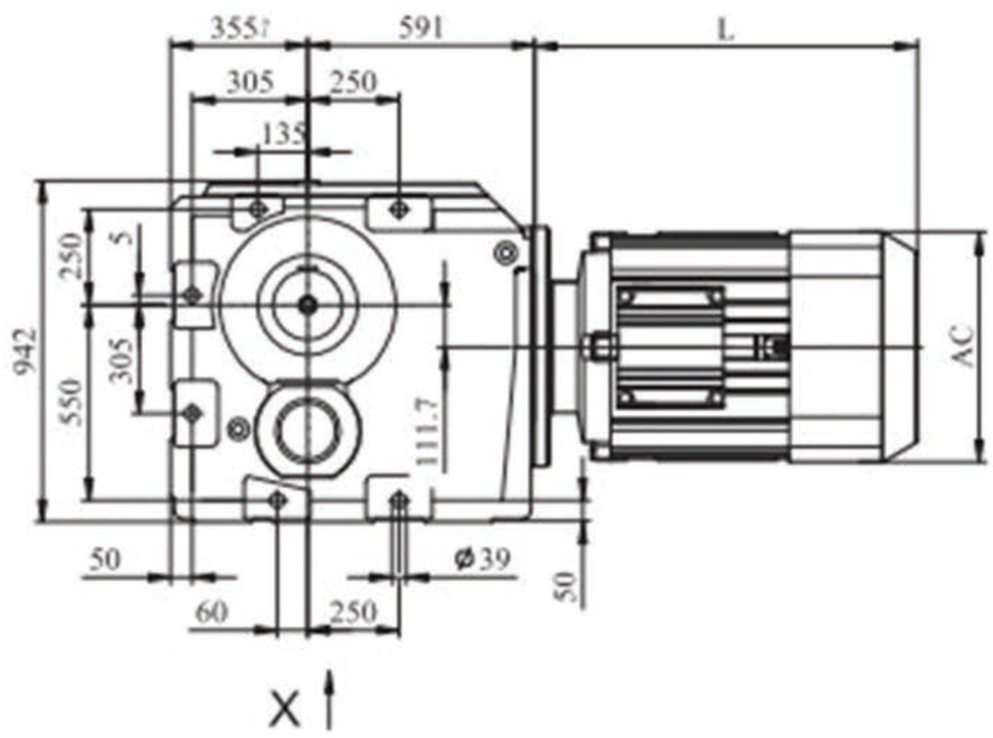

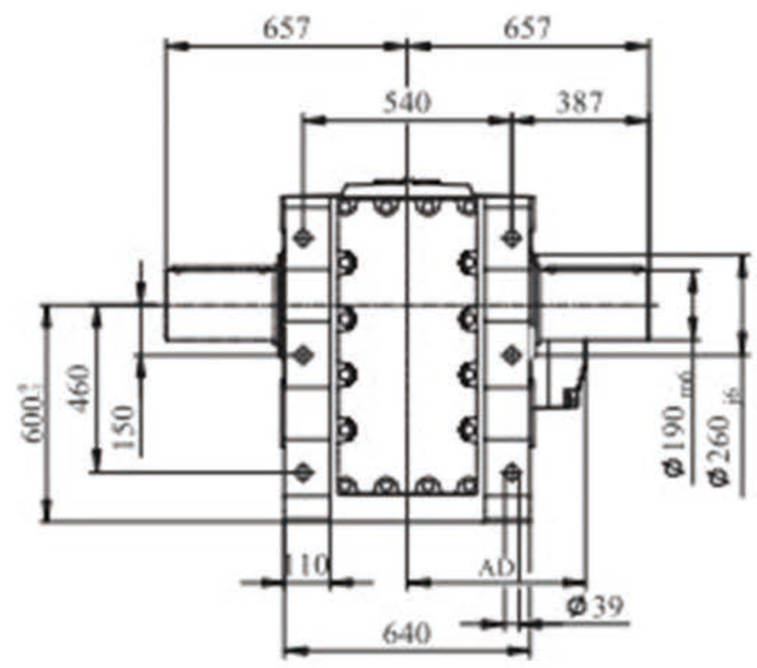

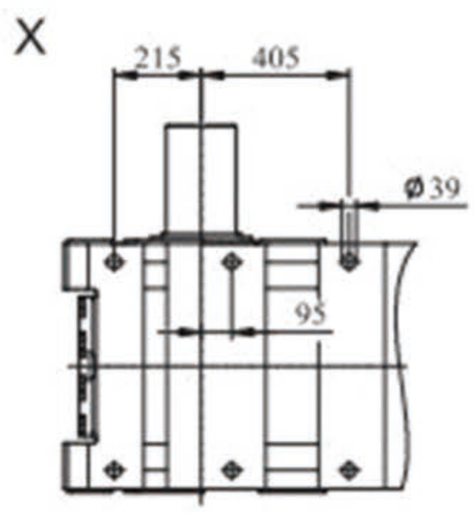

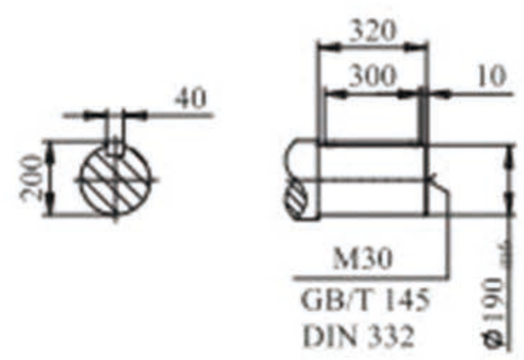

GKA/GKH187

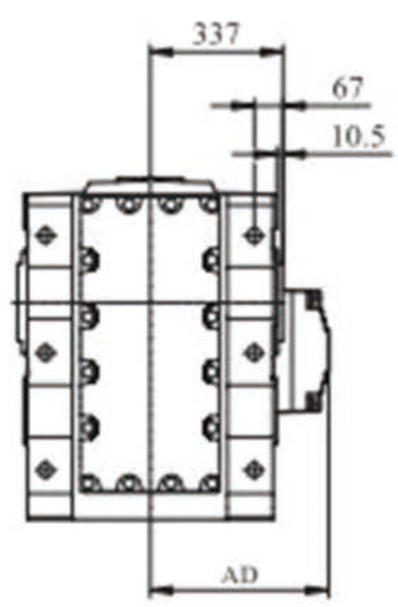

GKH187输出轴

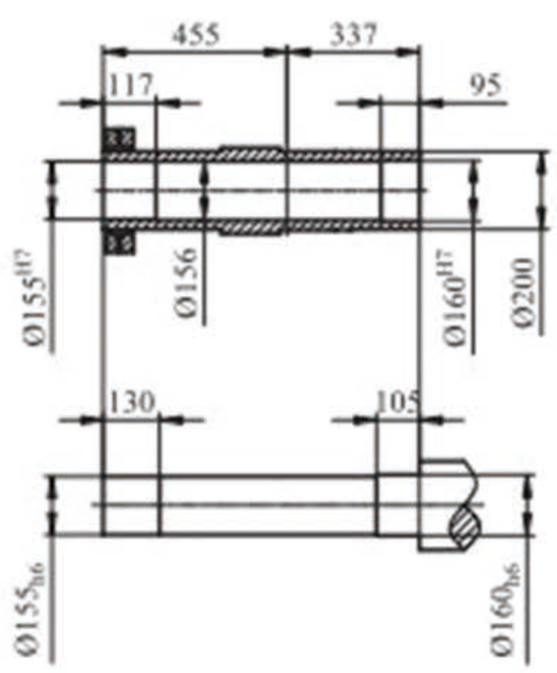

GKA187输出轴

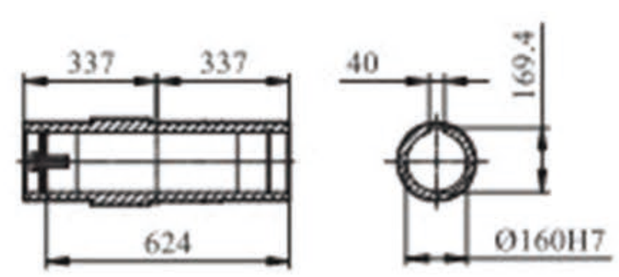

YE2电机机座号 Motor Size	160M	160L	180M	180L	200L	225S	225M	250M	280S	280M	315S	315M	315L	
L	567	602	635	666	642	669	691	770	828	879	1100	1210	1210	
AC	315	315	350	350	395	450	450	480	530	530	645	645	645	
AD	255	255	280	280	305	335	335	370	410	410	530	530	530	